Common Package Dimensions for CH Series ICs

Version: 3I

https://wch-ic.com

Contents

Contents 1

DIP Type (PDIP) 5

- **DIP8** 5
- **DIP14** 6
- **DIP16** 7
- **DIP18** 8
- **DIP20** 9
- **DIP24S (SKDIP24, DIP24-300mil)** 10
- **DIP28S (SKDIP28、DIP28-300mil)** 11
- **DIP28 (DIP28W, DIP28-600mil)** 12
- **SDIP28 (SDIP28-400mil)** 13
- **SDIP32 (SDIP32-400mil)** 14

SOP Type (SOIC) 15

- **SOP8, eSOP8** 15
- **SOP14** 16
- **SOP16 (SOP16-150mil)** 17
- **SOP18** 18
- **SOP20** 19
- **SOP24** 20
- **SOP28** 21
- **SOP30** 22

SSOP Type 23

- **SSOP10 (SSOP10-150mil-1.00), eSSOP10** 23
- **SSOP16 (SSOP16-209mil-0.65)** 24
- **SSOP20 (SSOP20-209mil-0.65)** 25
- **SSOP24 (SSOP24-209mil-0.65)** 26
- **SSOP28 (SSOP28-209mil-0.65)** 27

MSOP Type 28
- **MSOP10** 28

TSSOP Type (4.4mm, 173mil) 29
- **TSSOP8** 29
- **TSSOP14, eTSSOP14** 30
- **TSSOP16, eTSSOP16** 31
- **TSSOP20, eTSSOP20** 32
- **TSSOP24** 33
- **TSSOP28** 34

QSOP Type (3.9mm, 150mil) (SSOP-150) 35
- **QSOP16 (SSOP16-150mil-0.635)** 35
- **QSOP20 (SSOP20-150mil-0.635)** 36
- **QSOP24 (SSOP24-150mil-0.635)** 37
- **QSOP28 (SSOP28-150mil-0.635)** 38

QFP Type (PQFP, LQFP, TQFP) 39
- **PQFP44 (QFP44)** 39
- **PQFP52 (QFP52)** 40
- **PQFP64 (QFP64), LQFP64-14*14** 41
- **PQFP80 (QFP80)** 42
- **LQFP32 (LQFP32-7*7)** 43
- **LQFP44 (LQFP44-10*10)** 44
- **LQFP48 (LQFP48-7*7), TQFP48、eLQFP48** 45
- **LQFP64 (LQFP64-7*7), TQFP64, eLQFP64** 46
- **LQFP64M (LQFP64-10*10)** 47
- **LQFP80 (LQFP80-12*12)** 48
- **LQFP100 (LQFP100-14*14)** 49
- **LQFP128 (LQFP128-14*14)** 50
- **LQFP144 (LQFP144-20*20)** 51

QFN Type 52
- **QFN/DFN Naming Rules Reference** 52
- **QFN10L14X18 (QFN10-1.4*1.8*0.55-0.4)** 53
- **QFN10L15X2 (QFN10-1.5*2*0.55-0.4)** 54

- **QFN12 (QFN12-2*2*0.5-0.4)** 55
- **QFN14 (QFN14-2*2*0.55-0.4)** 56
- **QFN14X25 (QFN14-2.5*2.5*0.75-0.5)** 57
- **QFN16C2 (QFN16C-2*2*0.55-0.4)** 58
- **QFN16 (QFN16-3*3)** 59
- **QFN16-3*3*0.5-0.4** 60
- **QFN16X4 (QFN16-4*4)** 61
- **QFN18X2X28 (QFN18-2*2.8*0.5-0.4)** 62
- **QFN20 (QFN20-3*3)** 63
- **QFN20-3*3*0.55-0.4** 64
- **QFN20X4 (QFN20-4*4)** 65
- **QFN20X25X45 (QFN20-2.5*4.5*0.75-0.5)** 66
- **QFN20C2 (QFN20C-2*2*0.55-0.32)** 67
- **QFN24 (QFN24-4*4)** 68
- **QFN24X3 (QFN24-3*3*0.55-0.4)** 69
- **QFN26C3 (QFN26C-3*3*0.75-0.4)** 70
- **QFN28 (QFN28-4*4)** 71
- **QFN28X5 (QFN28-5*5)** 72
- **QFN32 (QFN32-4*4)** 73
- **QFN32X5 (QFN32-5*5)** 74
- **QFN32C28X45 (QFN32C-2.8*4.5*0.75-0.4)** 75
- **QFN36C4 (QFN36C-4*4*0.75-0.4)** 76
- **QFN36X6 (QFN36-6*6)** 77
- **QFN40 (QFN40-5*5)** 78
- **QFN40X6 (QFN40-6*6)** 79
- **QFN42X35X9 (QFN42-3.5*9*0.75-0.5)** 80
- **QFN42C35X9 (QFN42C-3.5*9*0.75-0.5)** 81
- **QFN46C5 (QFN46C-5*5*0.75-0.4)** 82
- **QFN48 (QFN48-5*5*0.75-0.35)** 83
- **QFN48-5*5*0.55-0.35** 84
- **QFN48X6 (QFN48-6*6)** 85

QFN48X7 (QFN48-7*7) 86

- **QFN52X35X9 (QFN52-3.5*9*0.75-0.4)** 87
- **QFN56 (QFN56-7*7)** 88
- **QFN56X8 (QFN56-8*8)** 89
- **QFN64 (QFN64-8*8)** 90
- **QFN64X9 (QFN64-9*9)** 91
- **QFN68 (QFN68-8*8)** 92
- **QFN76 (QFN76-9*9)** 93
- **QFN80 (QFN80-9*9)** 94

QFN88 (QFN88-10*10) 95

- **QFN128 (QFN128-12.3*12.3)** 96

DFN Type 97

- **DFN6X12 (DFN6-1.2*1.2*0.45-0.4)** 97
- **DFN6 (DFN6-2*2)** 98
- **DFN8 (DFN8-2*2)** 99
- **DFN10 (DFN10-2*2)** 100
- **DFN10X3 (DFN10-3*3)** 101

SOT Type 102

- **SOT23-3** 102
- **SOT23-5, TSOT23-5L** 103
- **SOT23-6, TSOT23-6L** 104
- **SOT23-8, TSOT23-8L** 105
- **SOT363 (SC70-6L)** 106
- **SOT353 (SC70-5L)** 107

Note: All dimensions are in mm (millimeters),
and the lead center spacing is always a nominal value, with no error value;
other than that, the dimensional error is not greater than ±0.2mm or ±10%, whichever is greater.

DIP Type (PDIP)

- **DIP8**

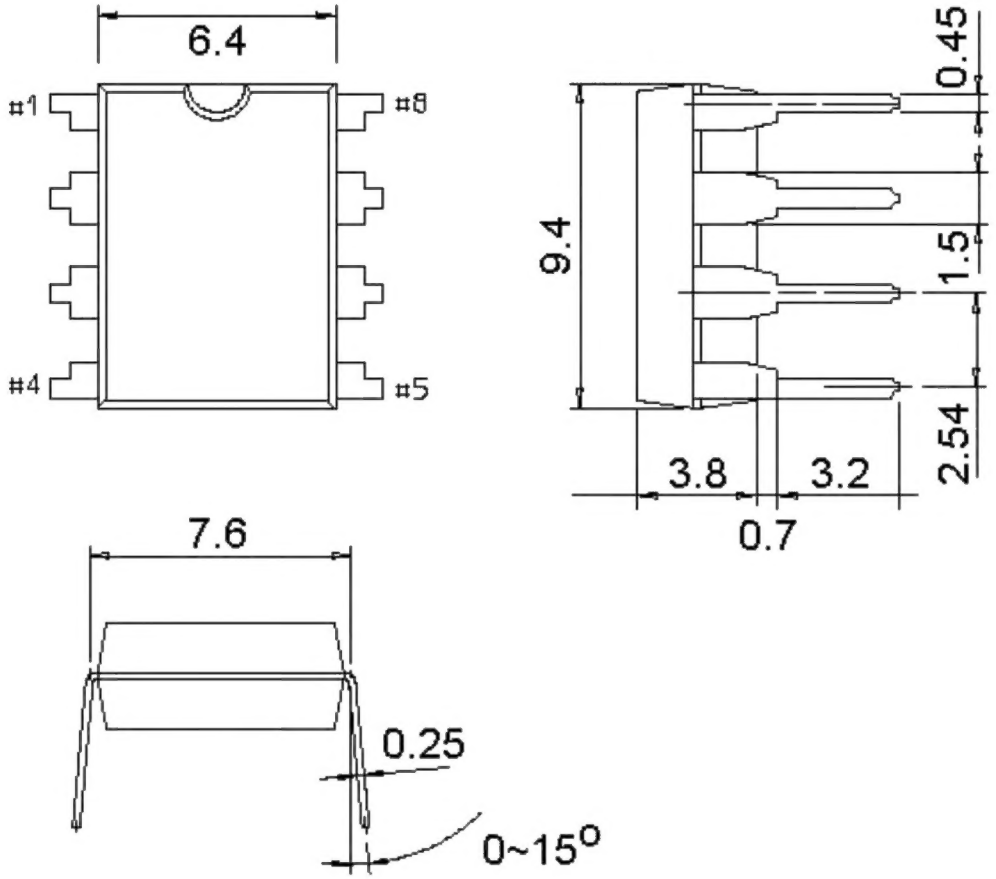

. **DIP14**

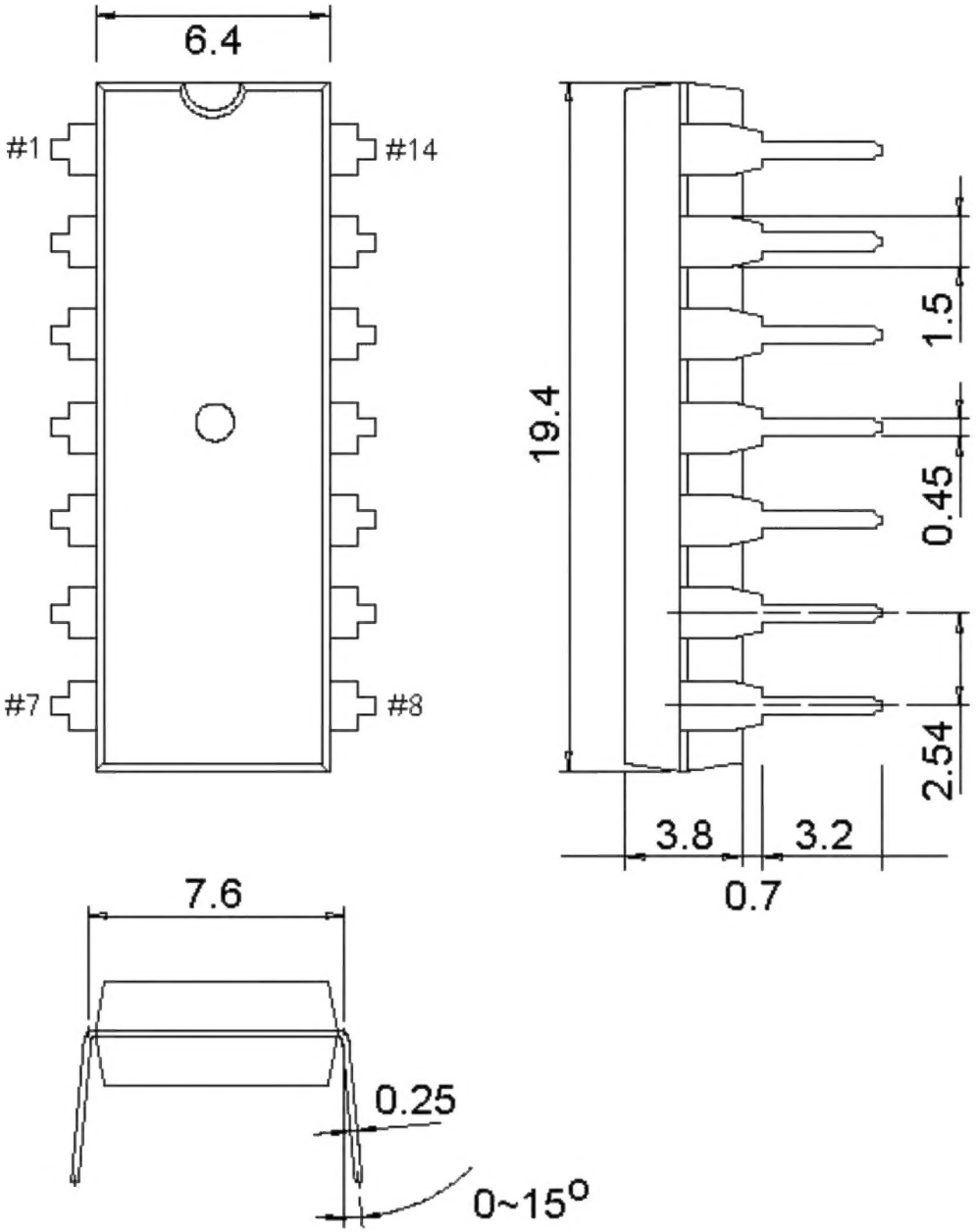

. **DIP16**

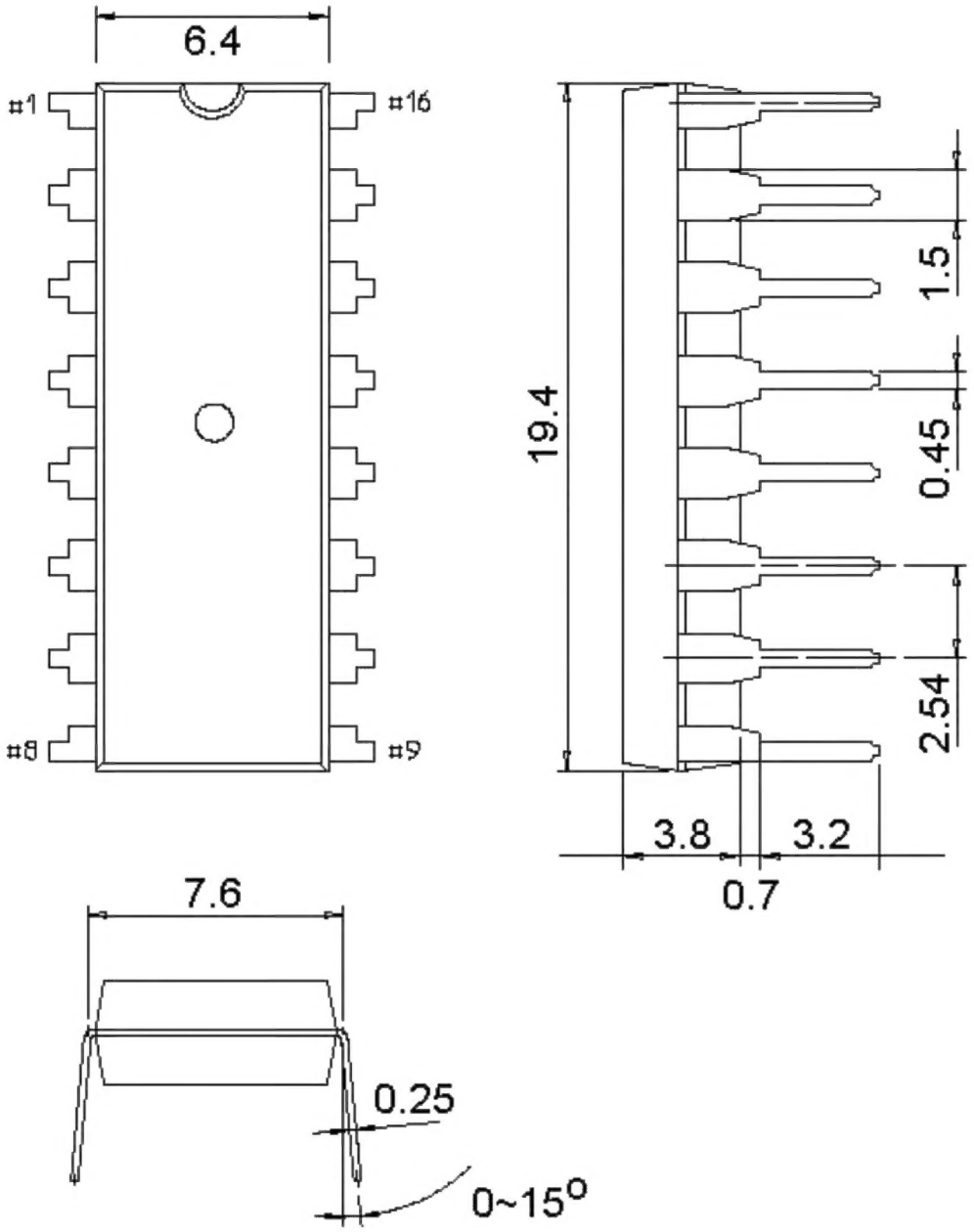

. **DIP18**

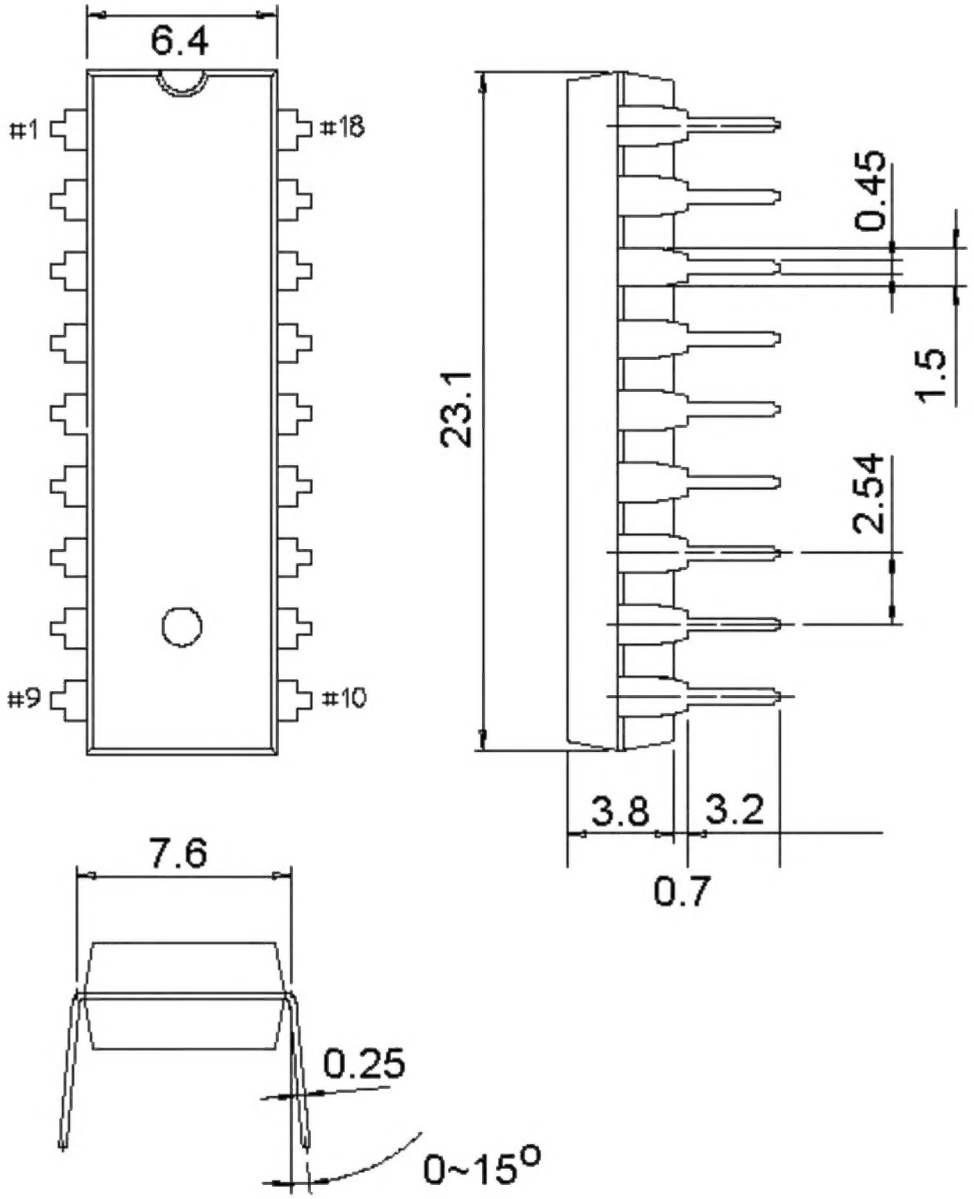

. **DIP20**

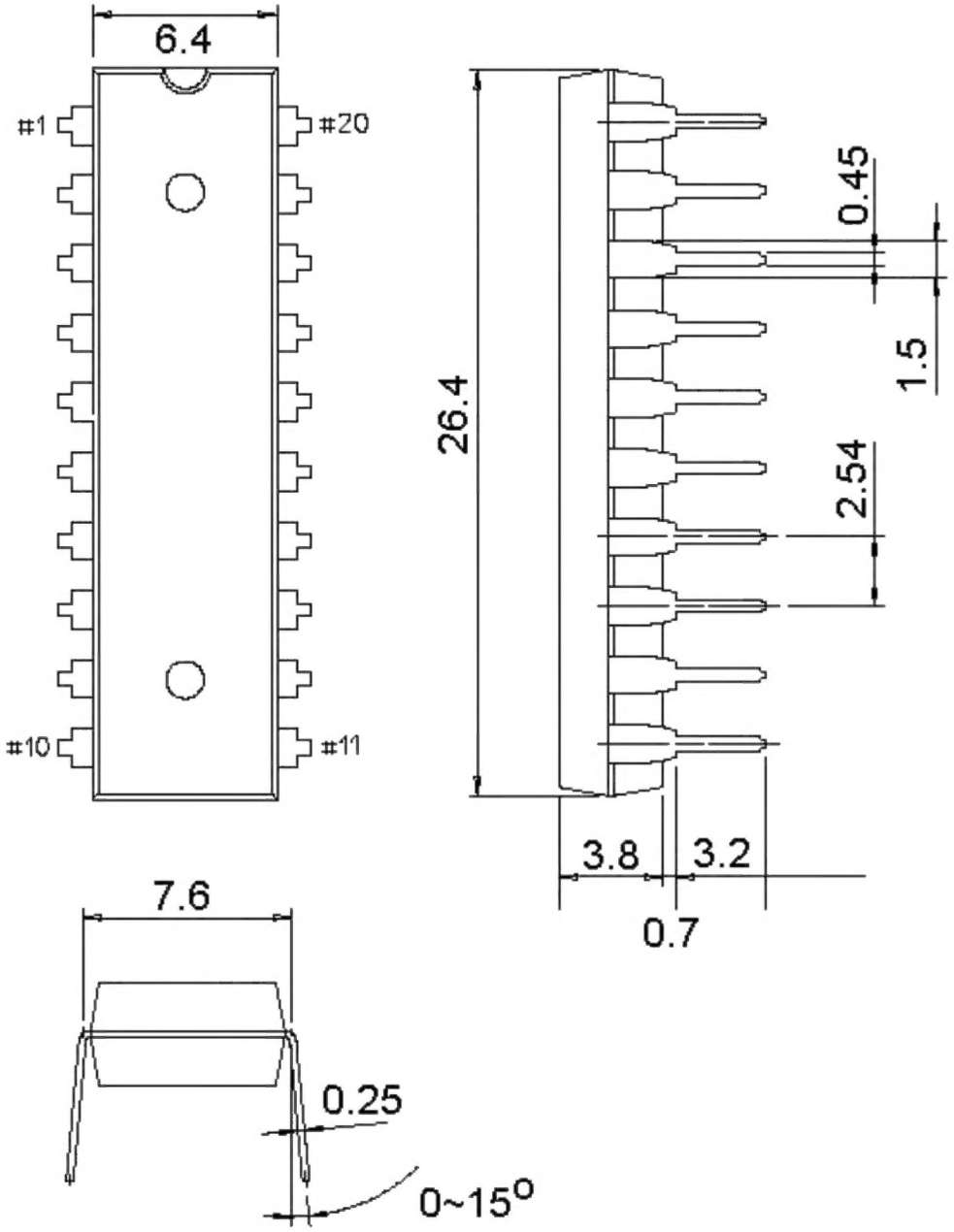

- **DIP24S (SKDIP24, DIP24-300mil)**

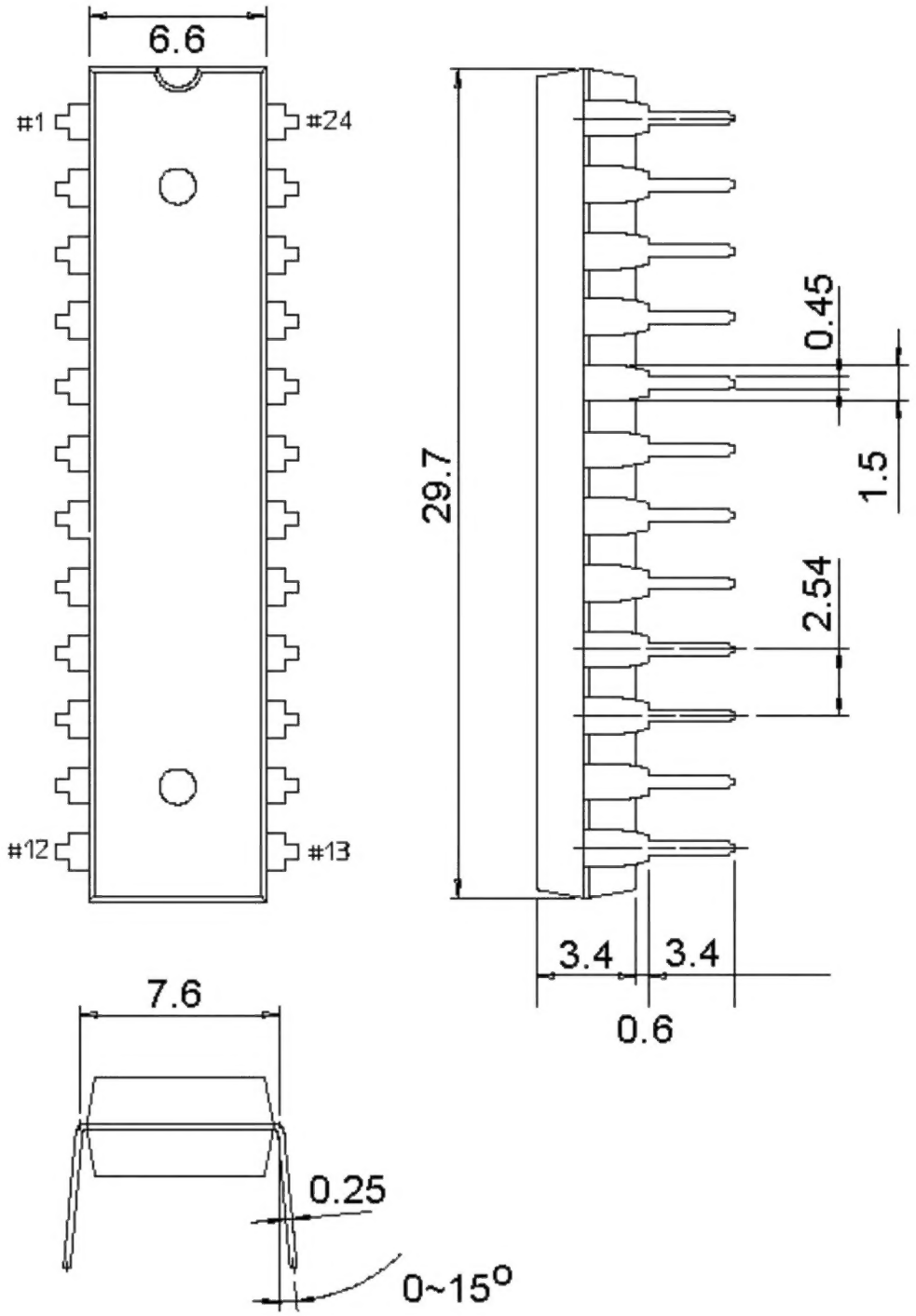

- **DIP28S (SKDIP28、DIP28-300mil)**

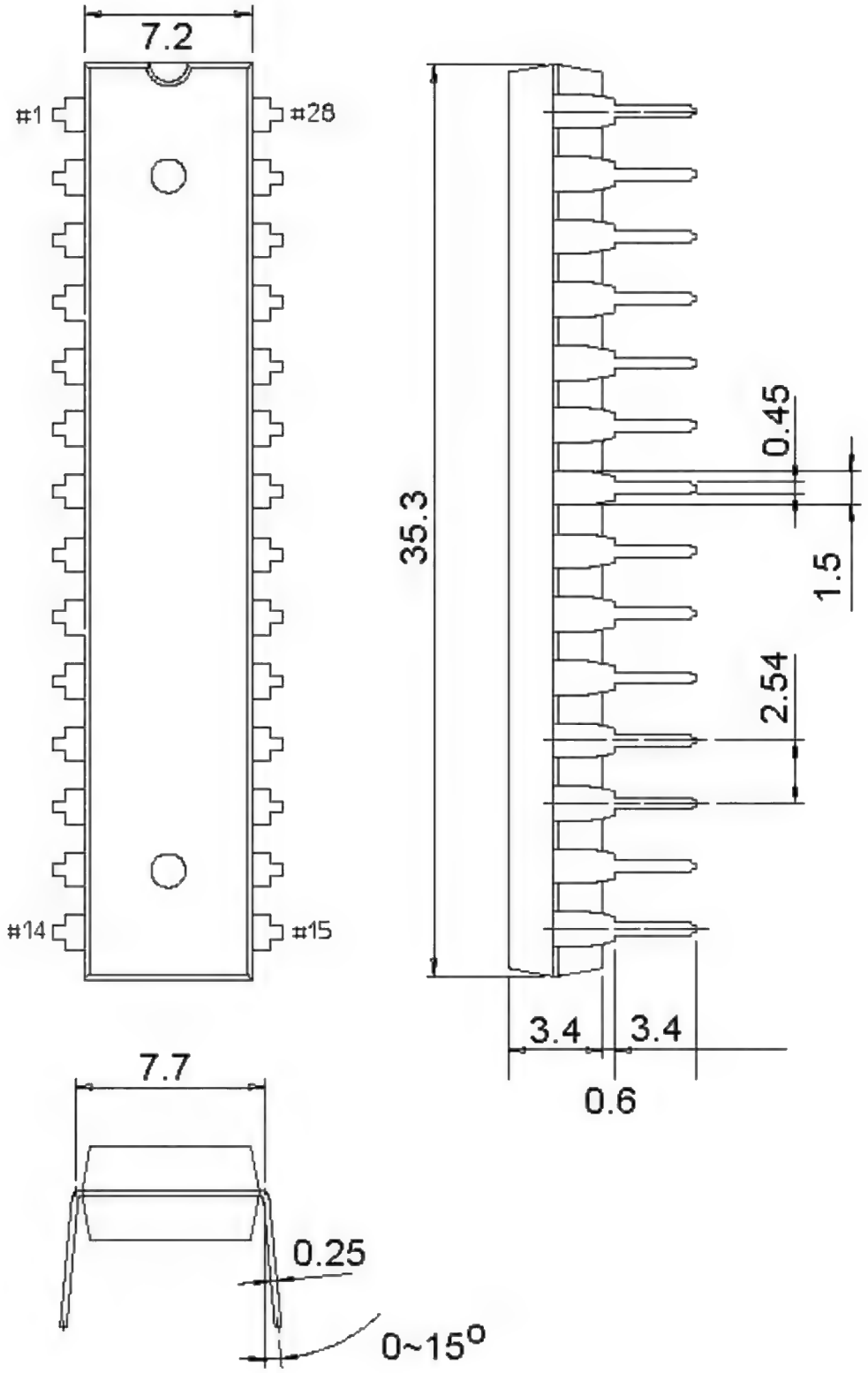

- **DIP28 (DIP28W, DIP28-600mil)**

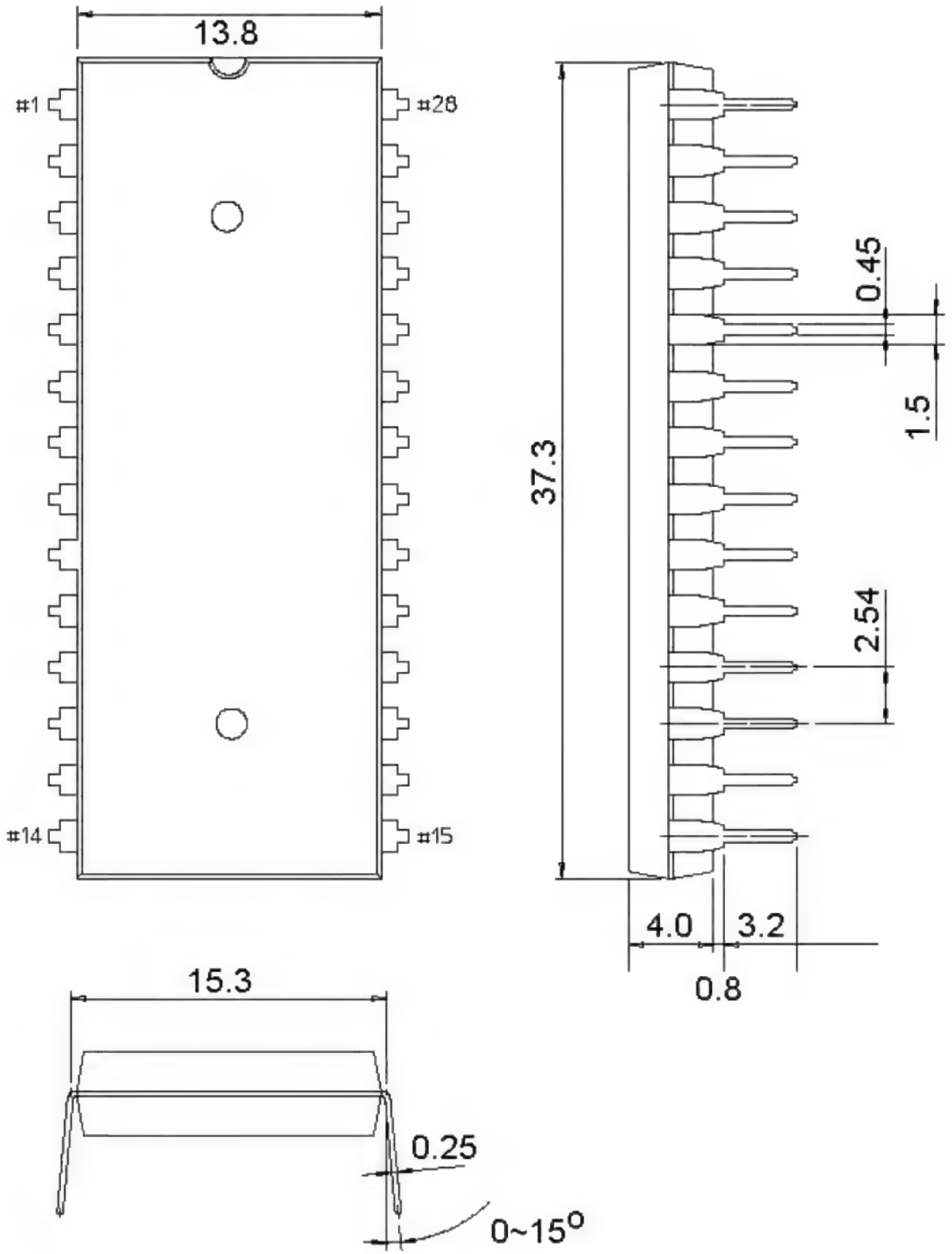

- **SDIP28 (SDIP28-400mil)**

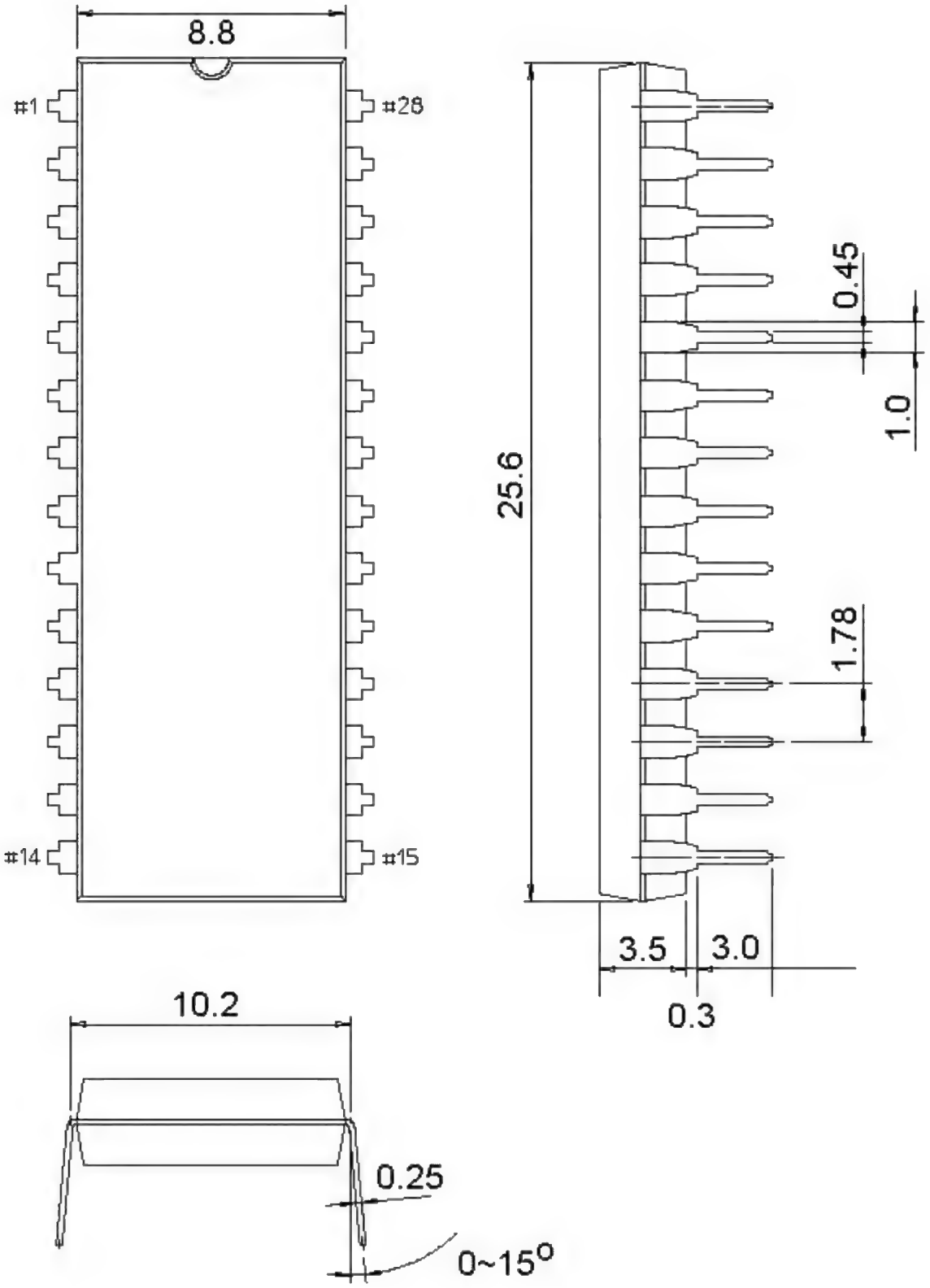

- **SDIP32 (SDIP32-400mil)**

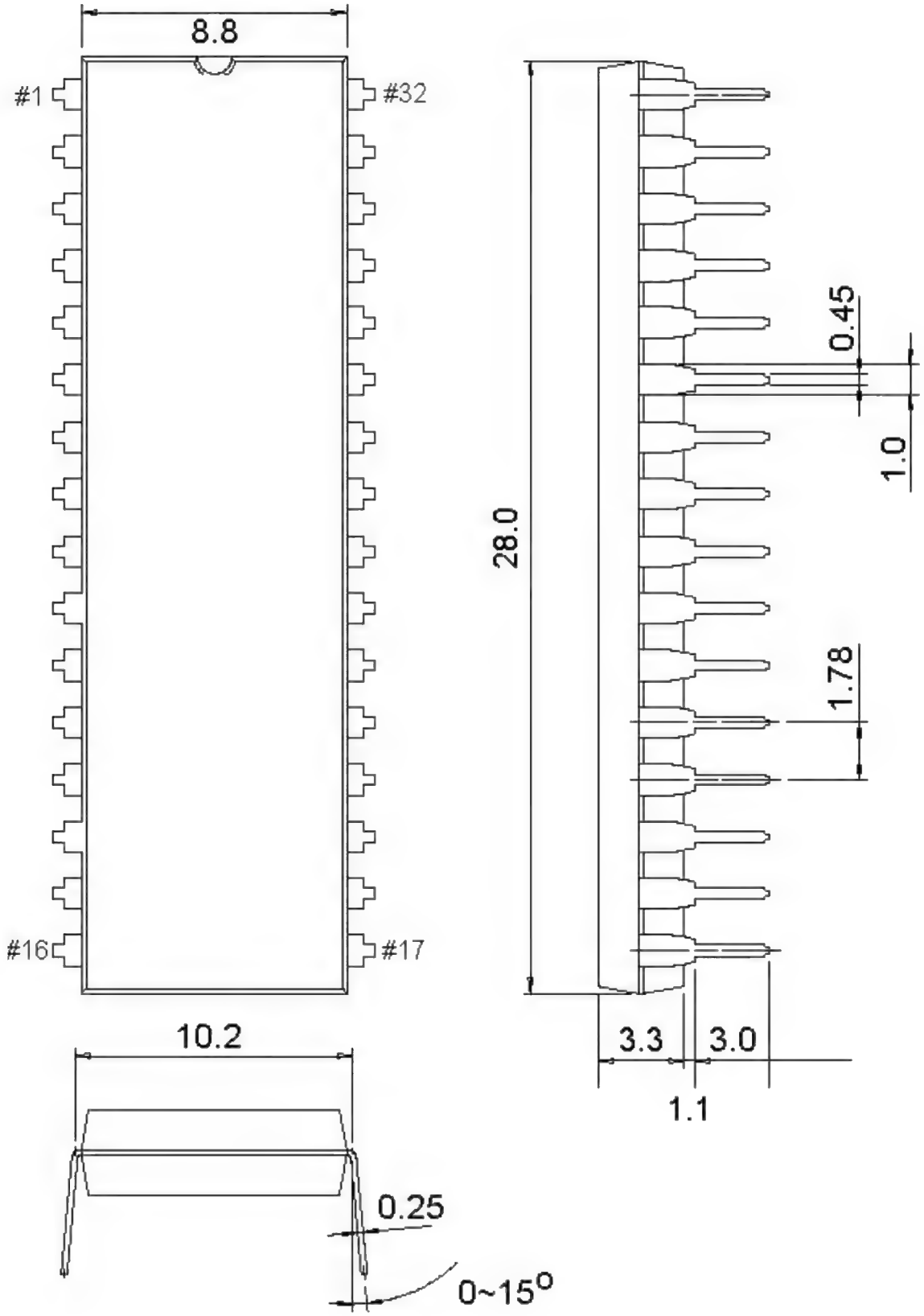

SOP Type (SOIC)

- **SOP8, eSOP8**

eSOP8 Exposed Pad: 2.1*3.3, 2.1*2.1

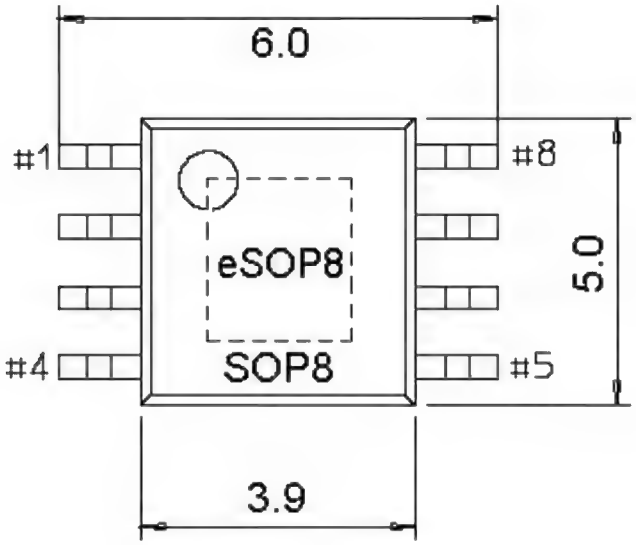

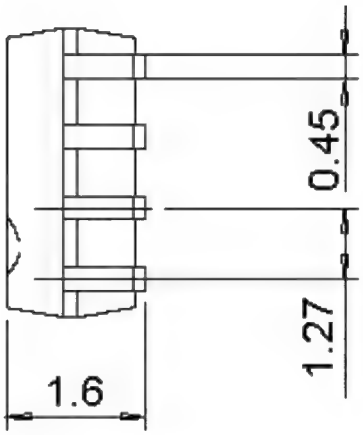

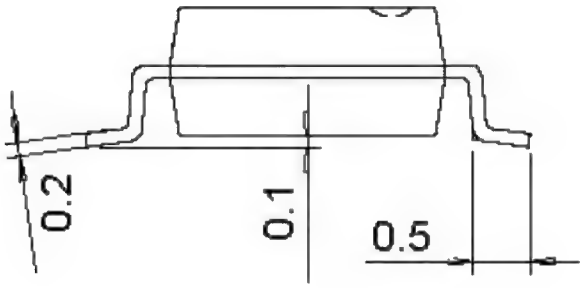

- **SOP14**

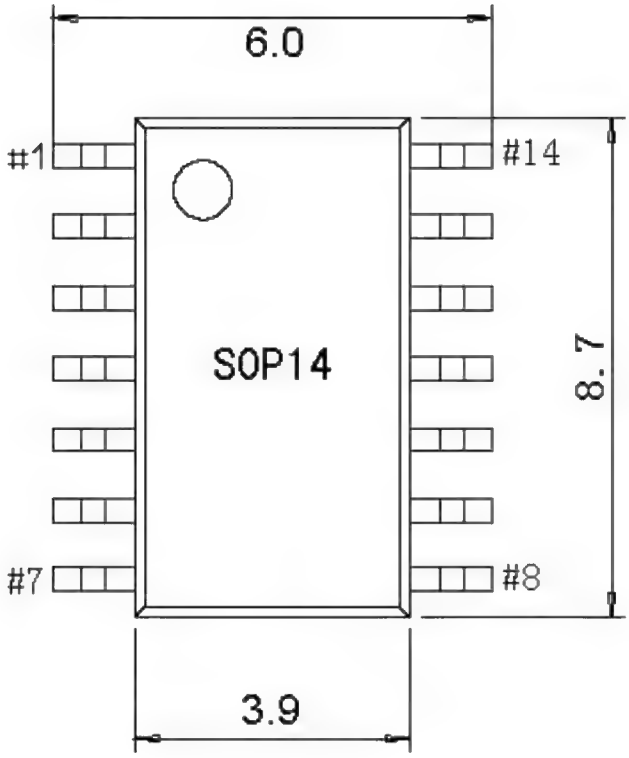

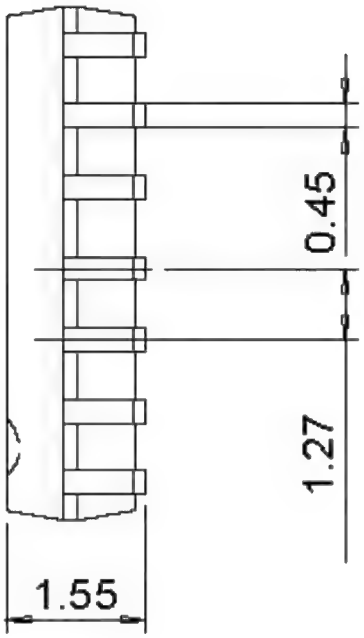

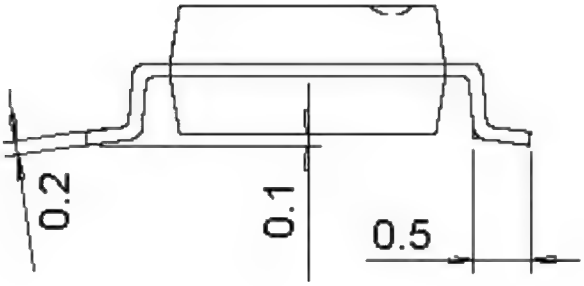

- **SOP16 (SOP16-150mil)**

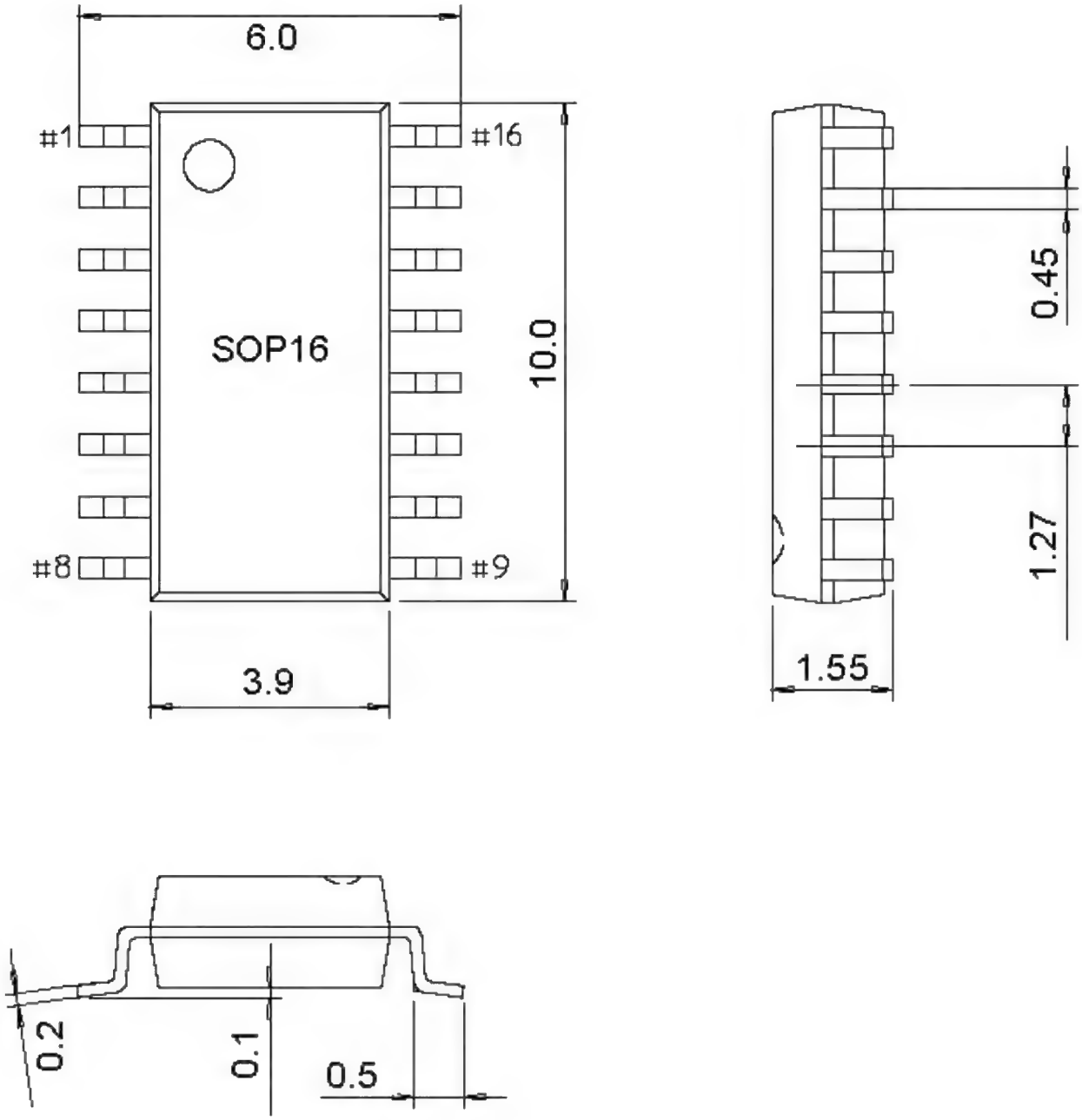

- **SOP18**

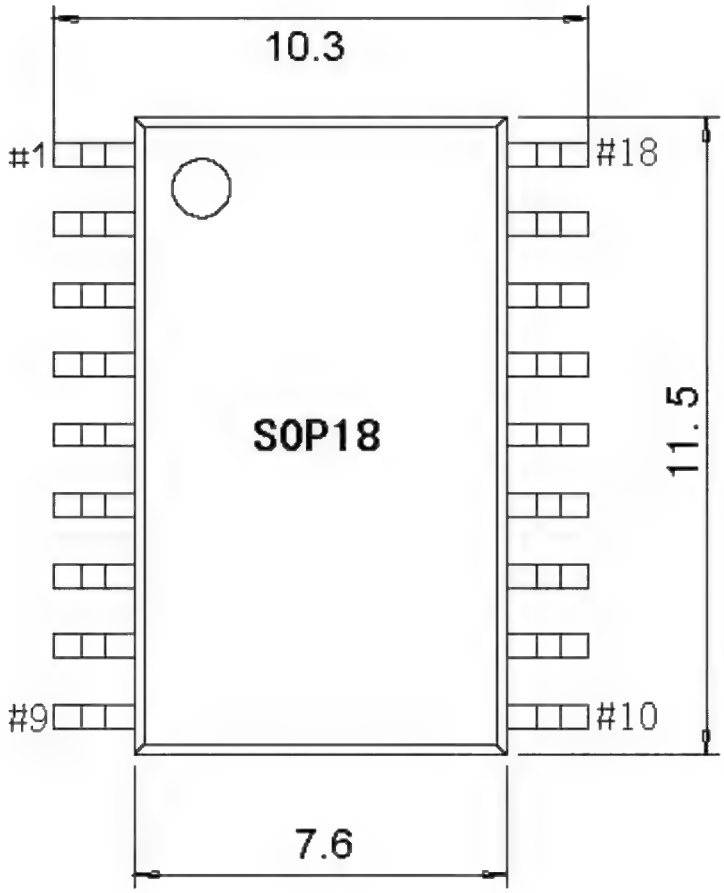

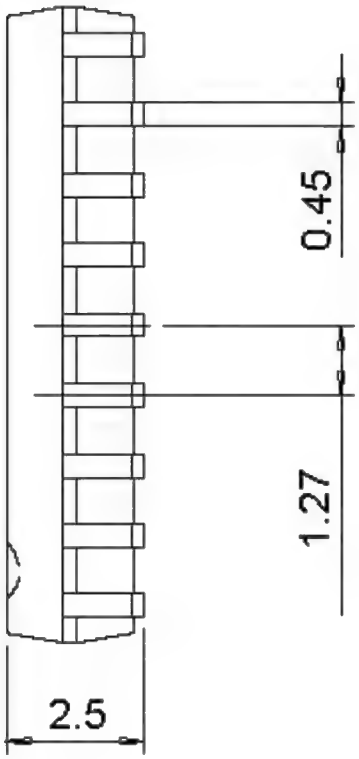

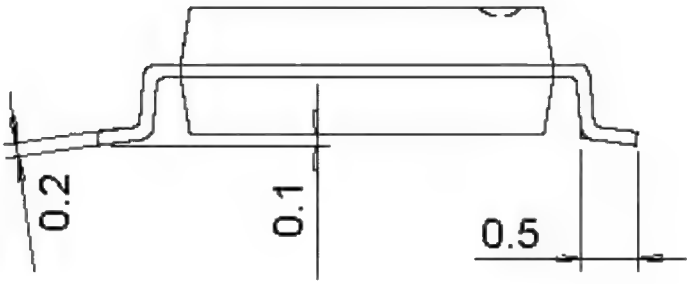

- **SOP20**

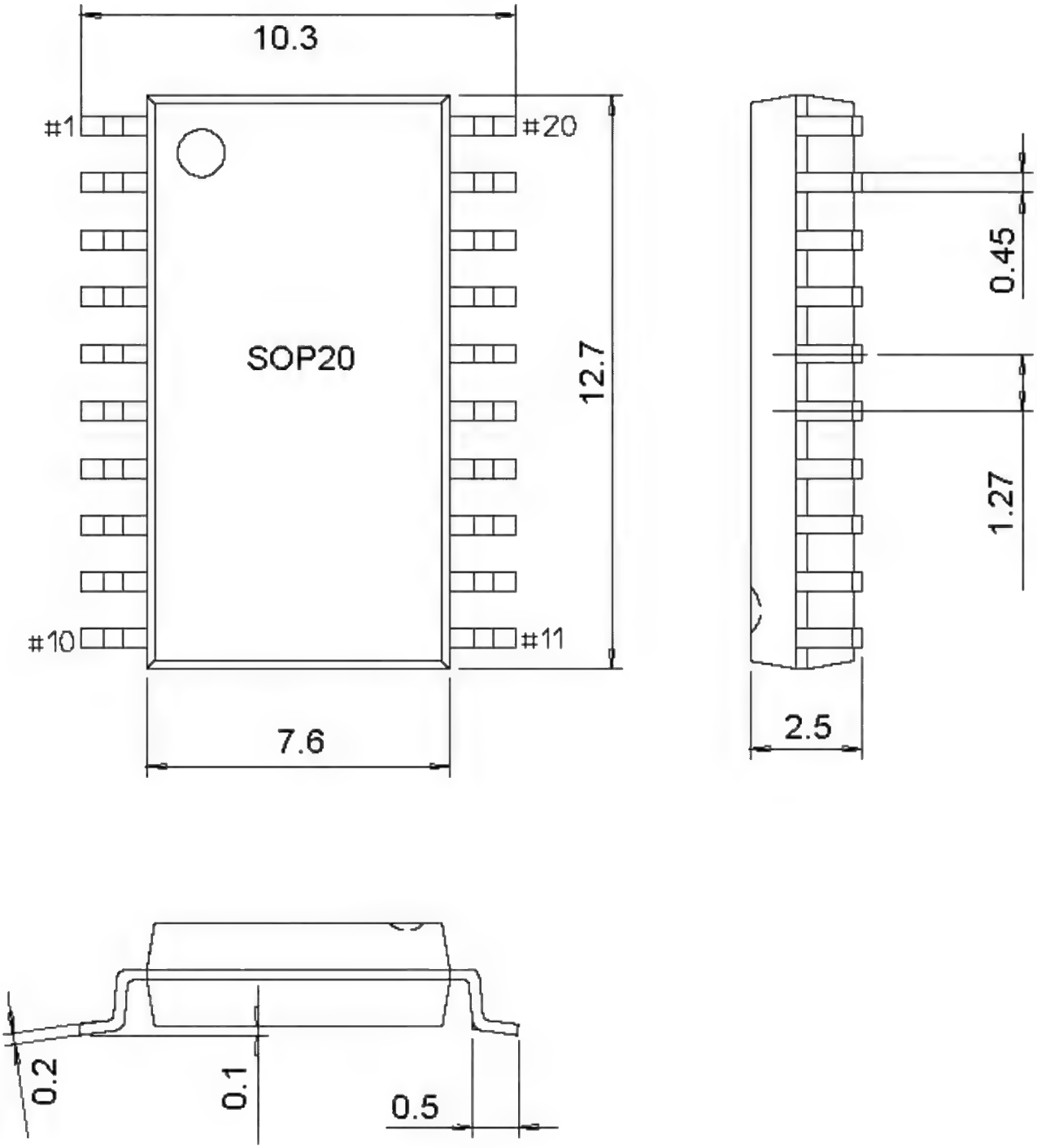

- **SOP24**

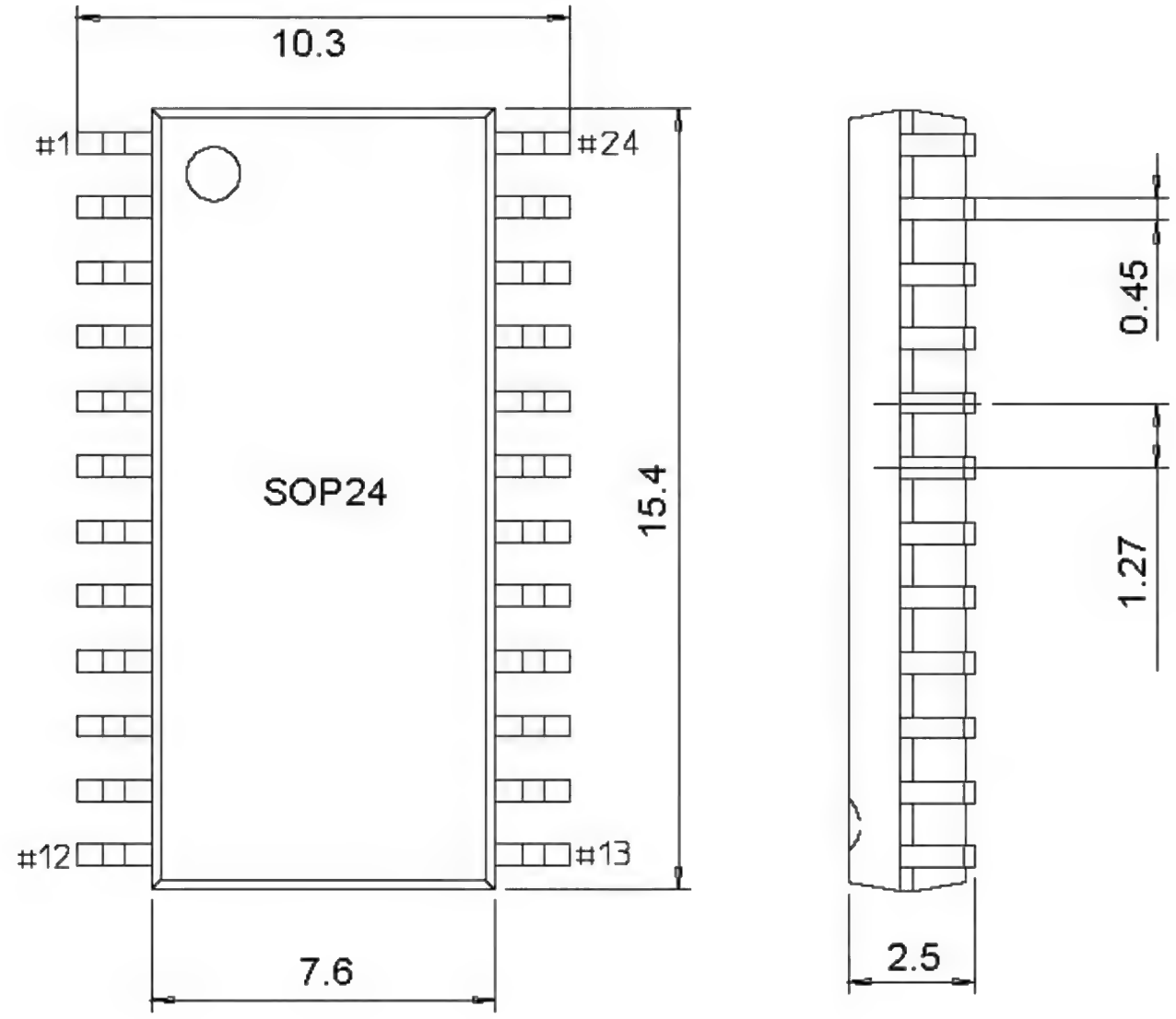

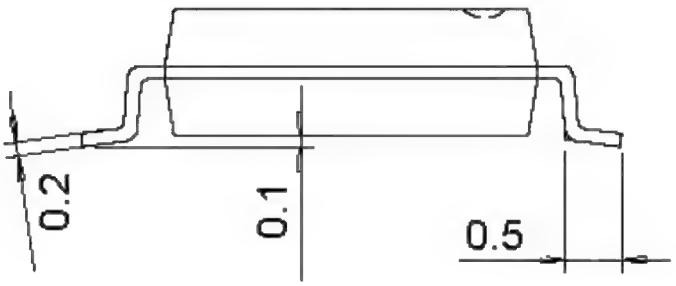

- **SOP28**

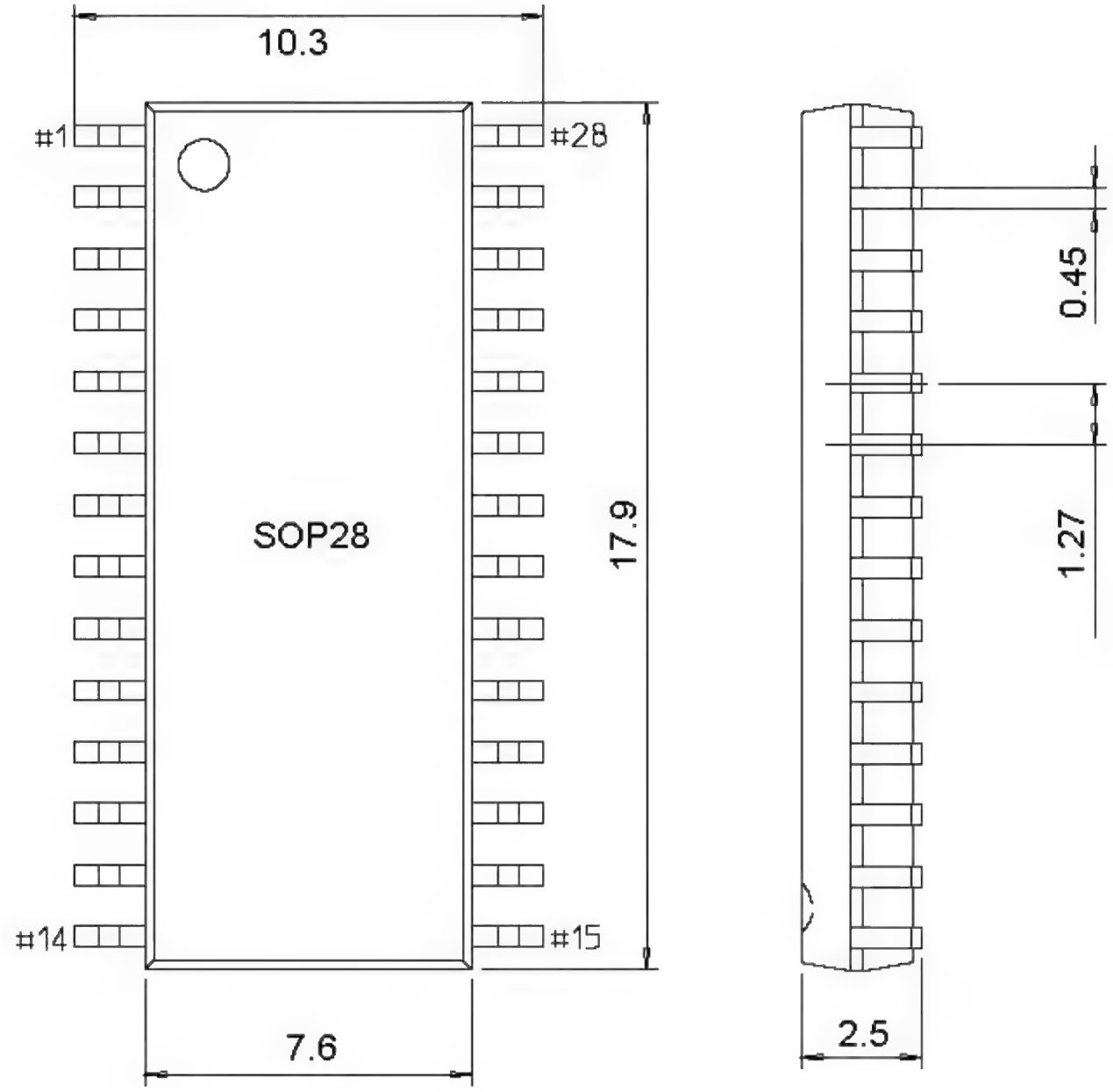

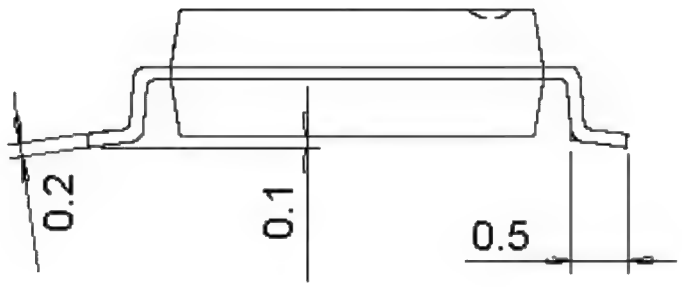

- **SOP30**

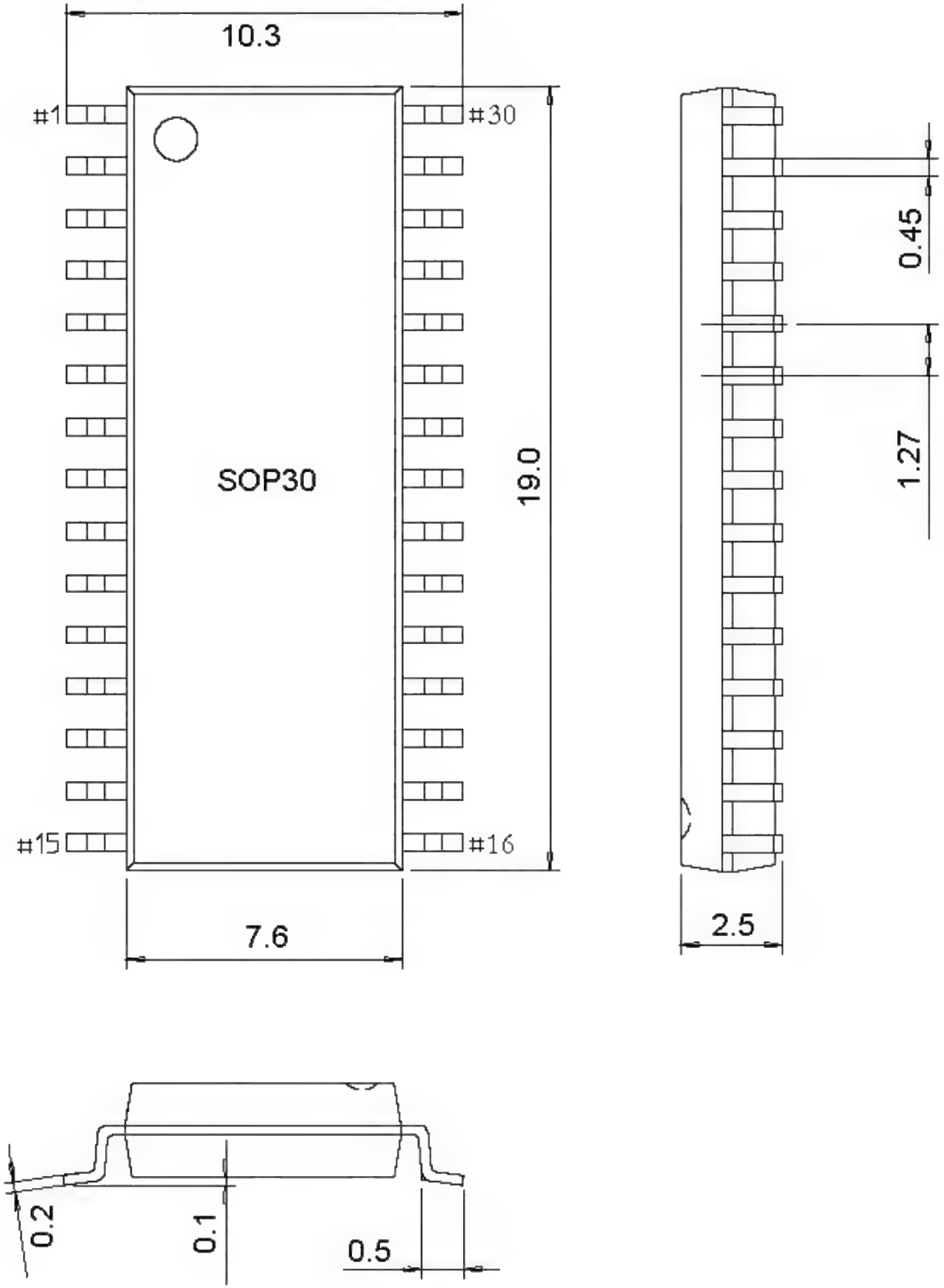

SSOP Type

- **SSOP10 (SSOP10-150mil-1.00), eSSOP10**

eSSOP10 Exposed Pad: 2.1*3.3

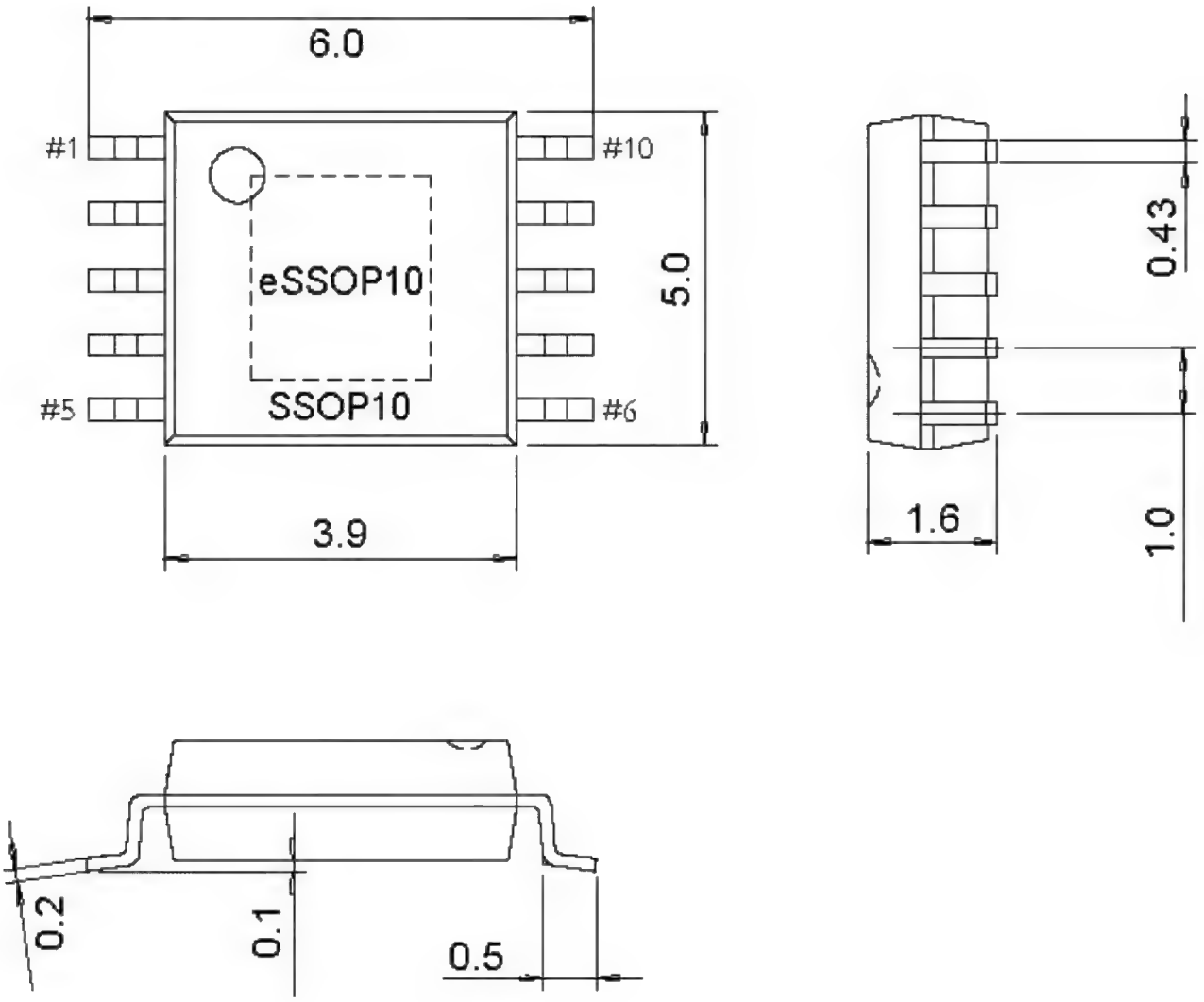

- **SSOP16 (SSOP16-209mil-0.65)**

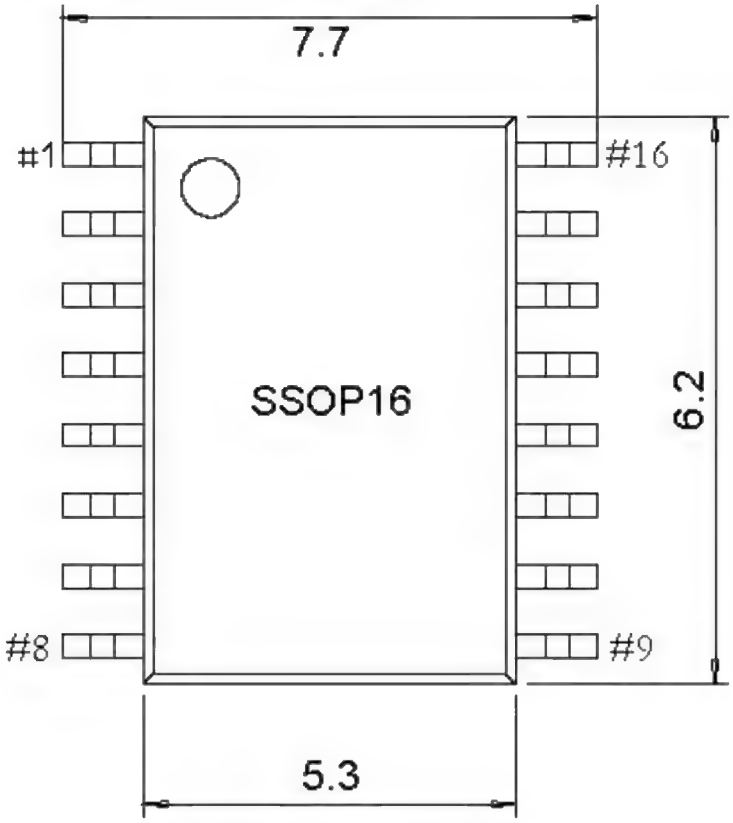

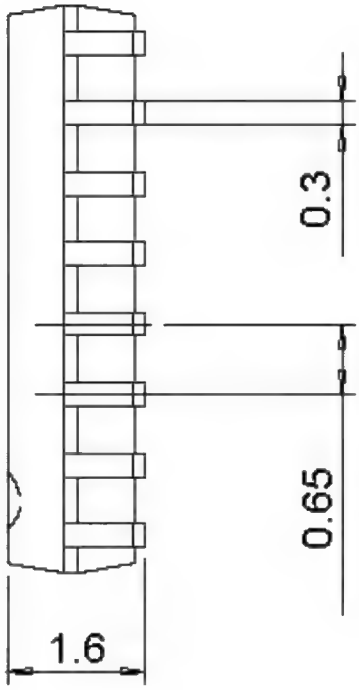

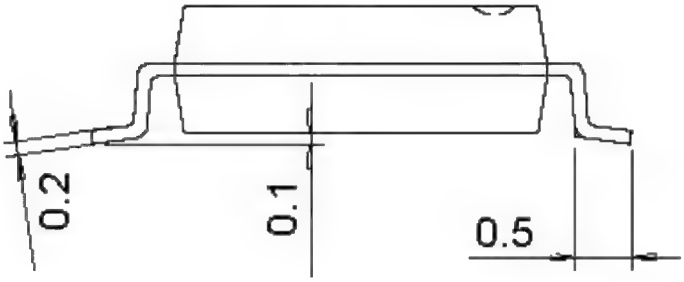

- **SSOP20 (SSOP20-209mil-0.65)**

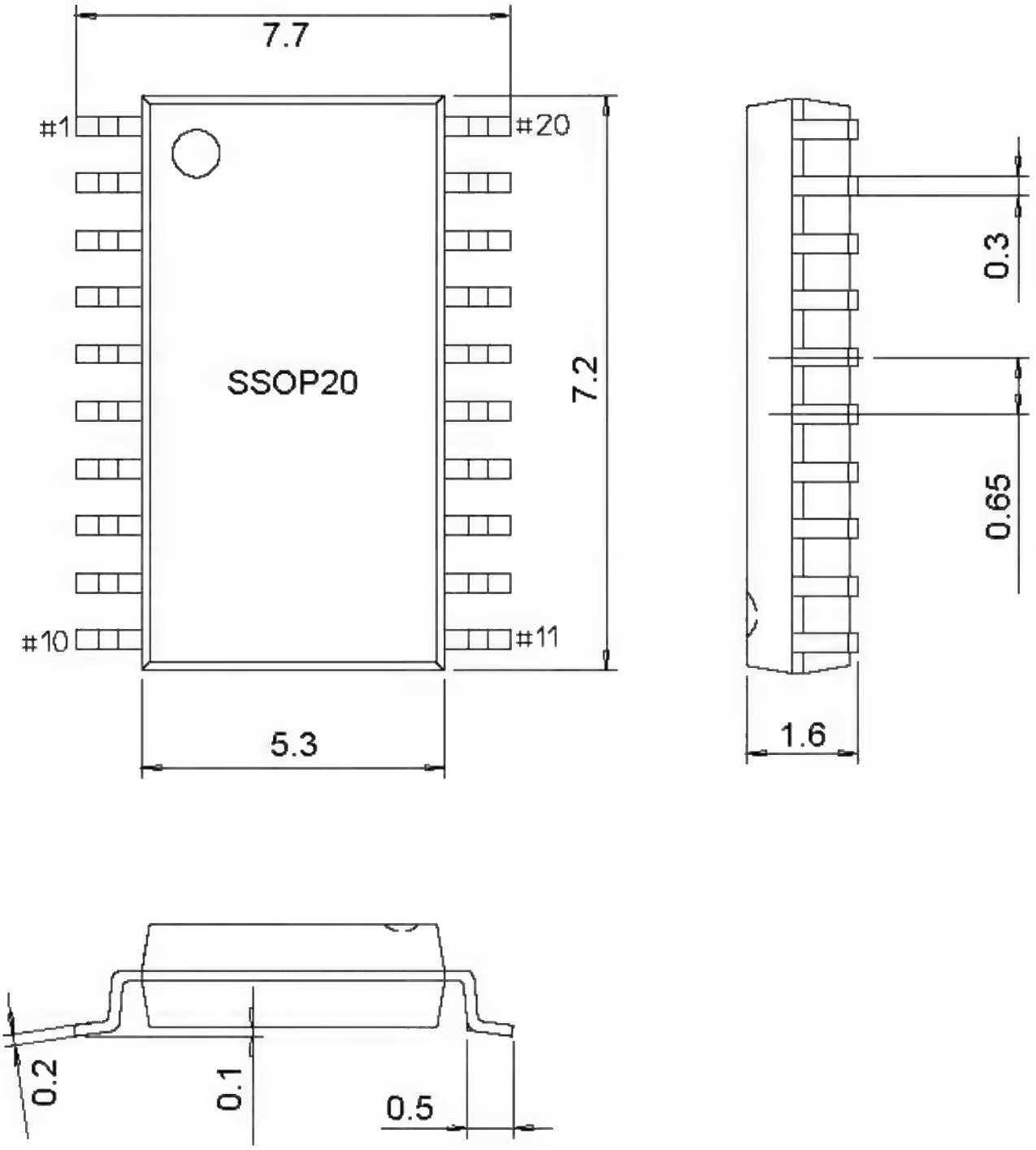

- **SSOP24 (SSOP24-209mil-0.65)**

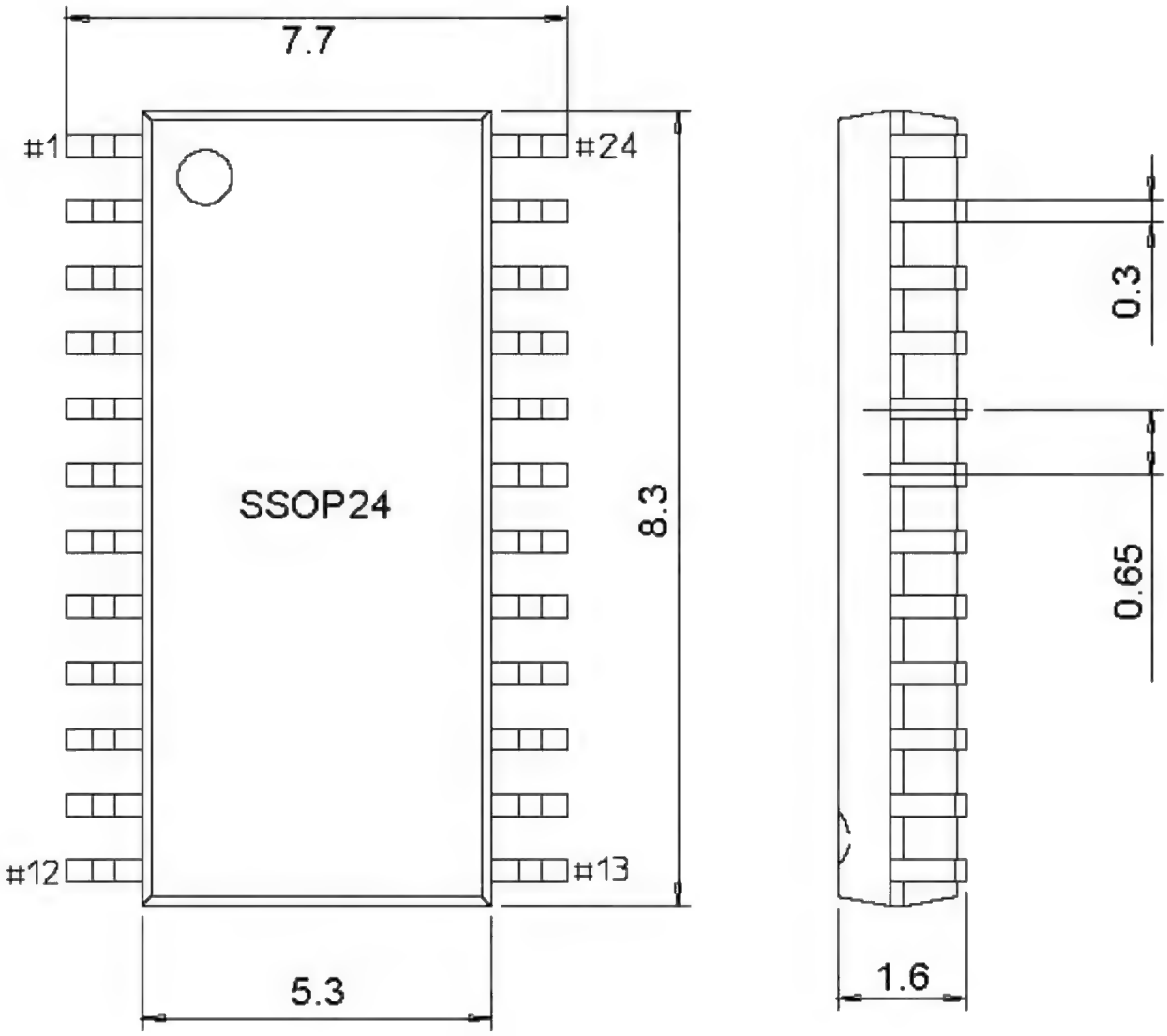

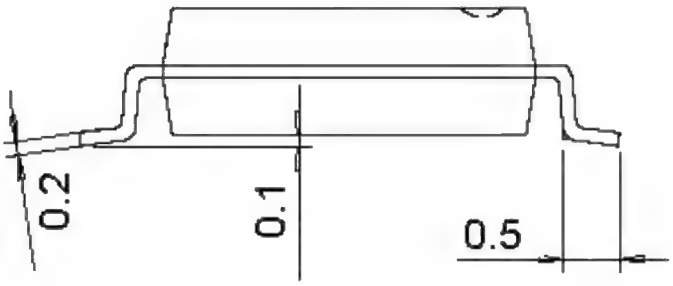

- **SSOP28 (SSOP28-209mil-0.65)**

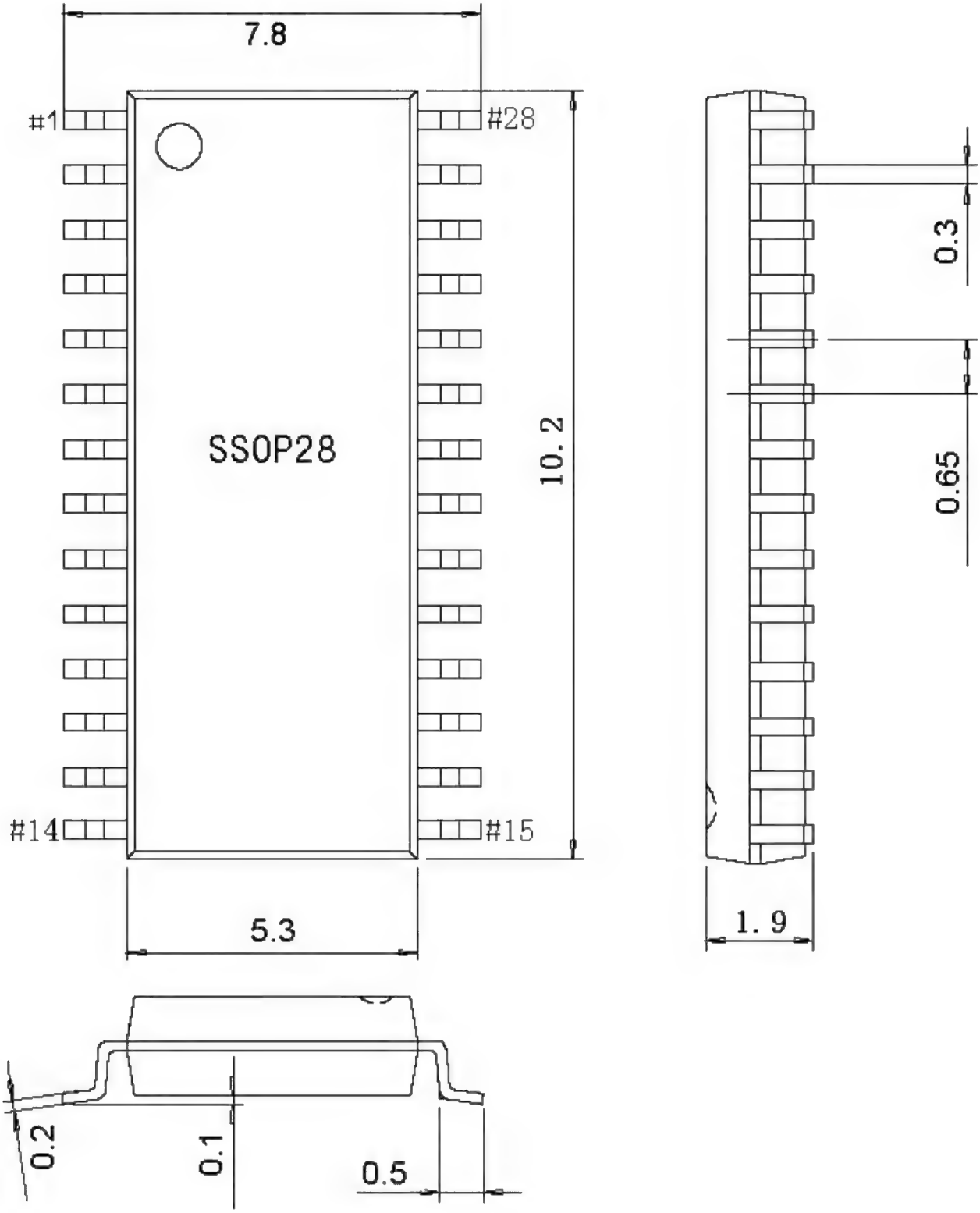

MSOP Type

- **MSOP10**

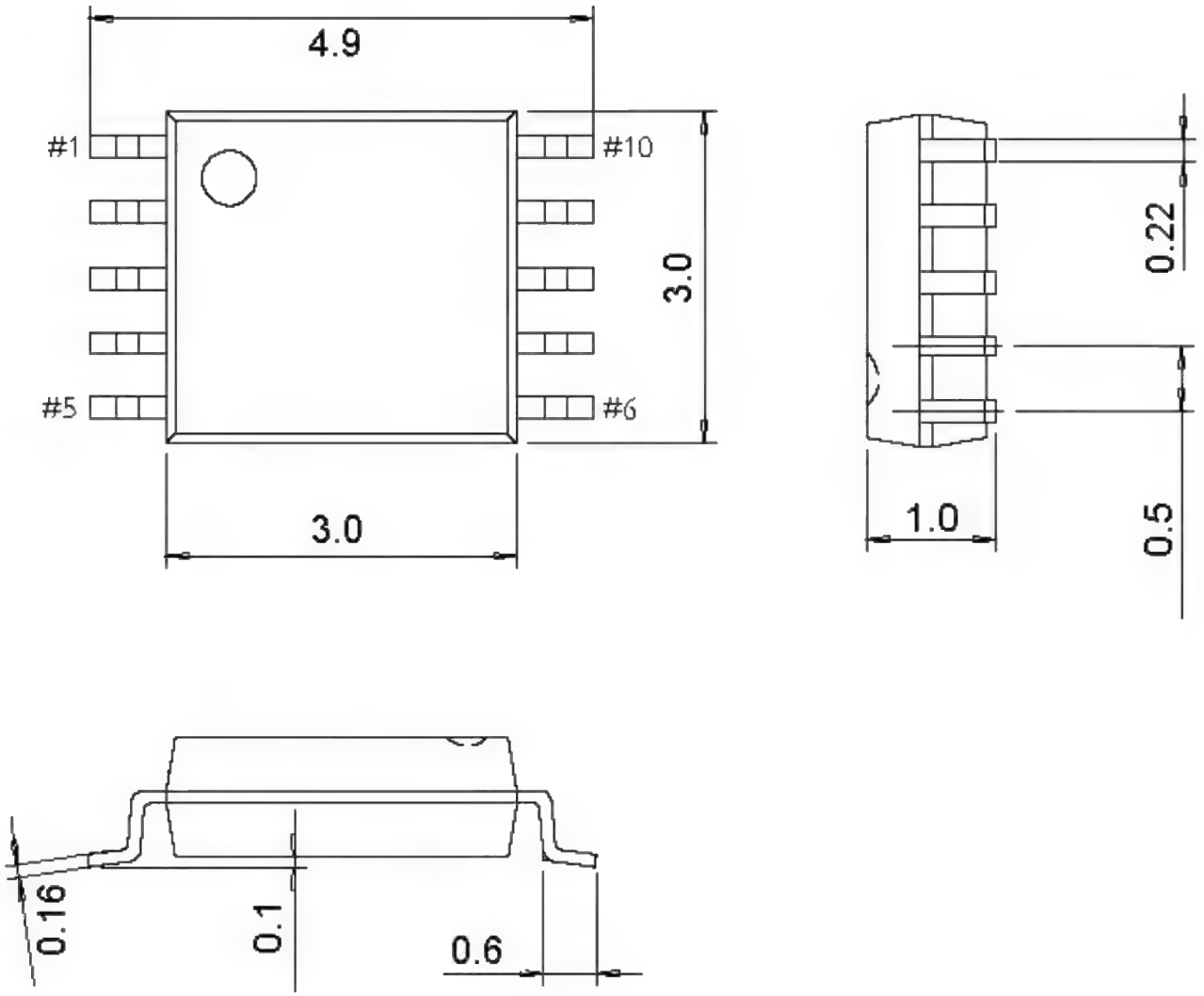

TSSOP Type (4.4mm, 173mil)

- **TSSOP8**

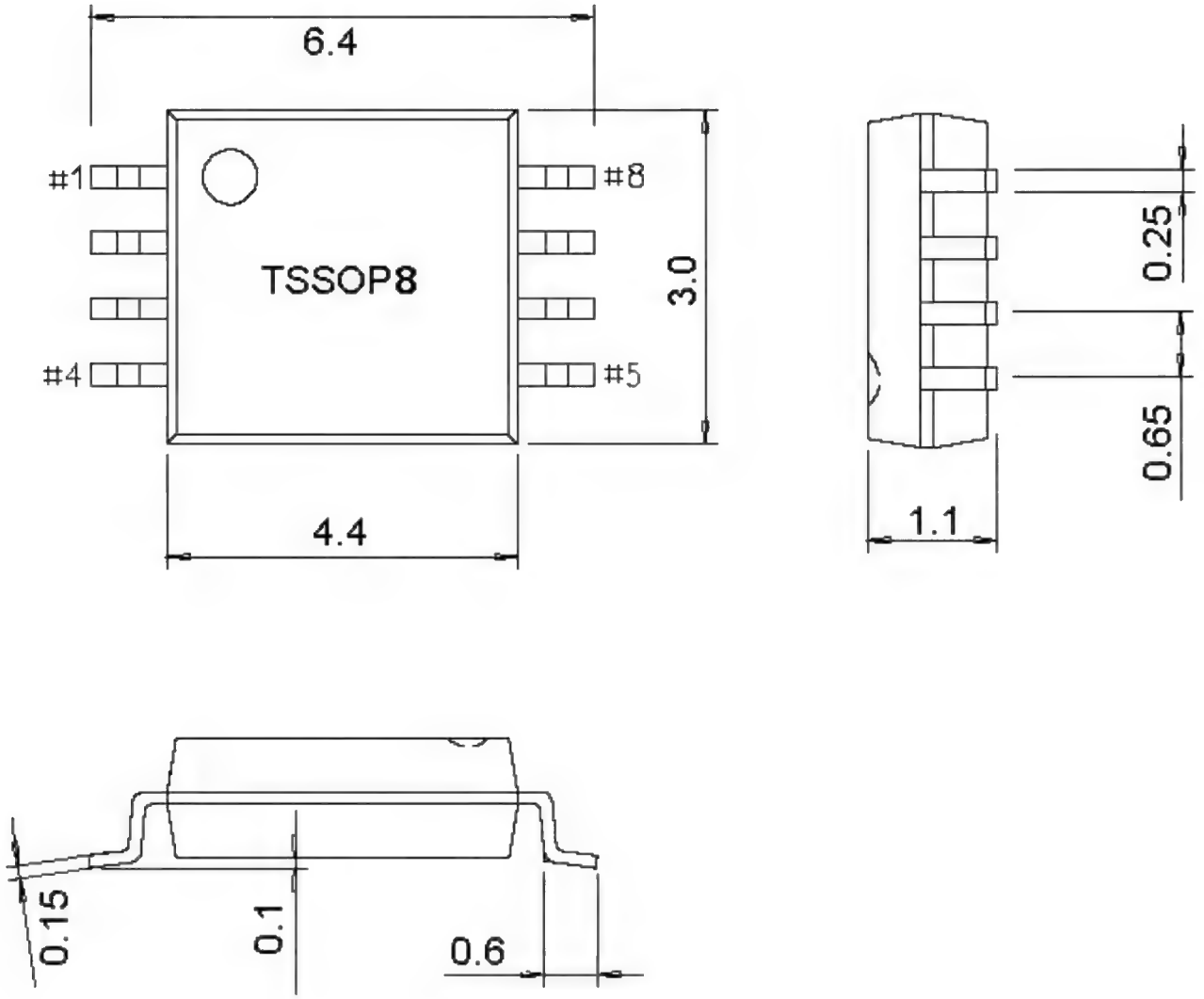

- **TSSOP14, eTSSOP14**

eTSSOP14 Exposed Pad: 3.0*3.0

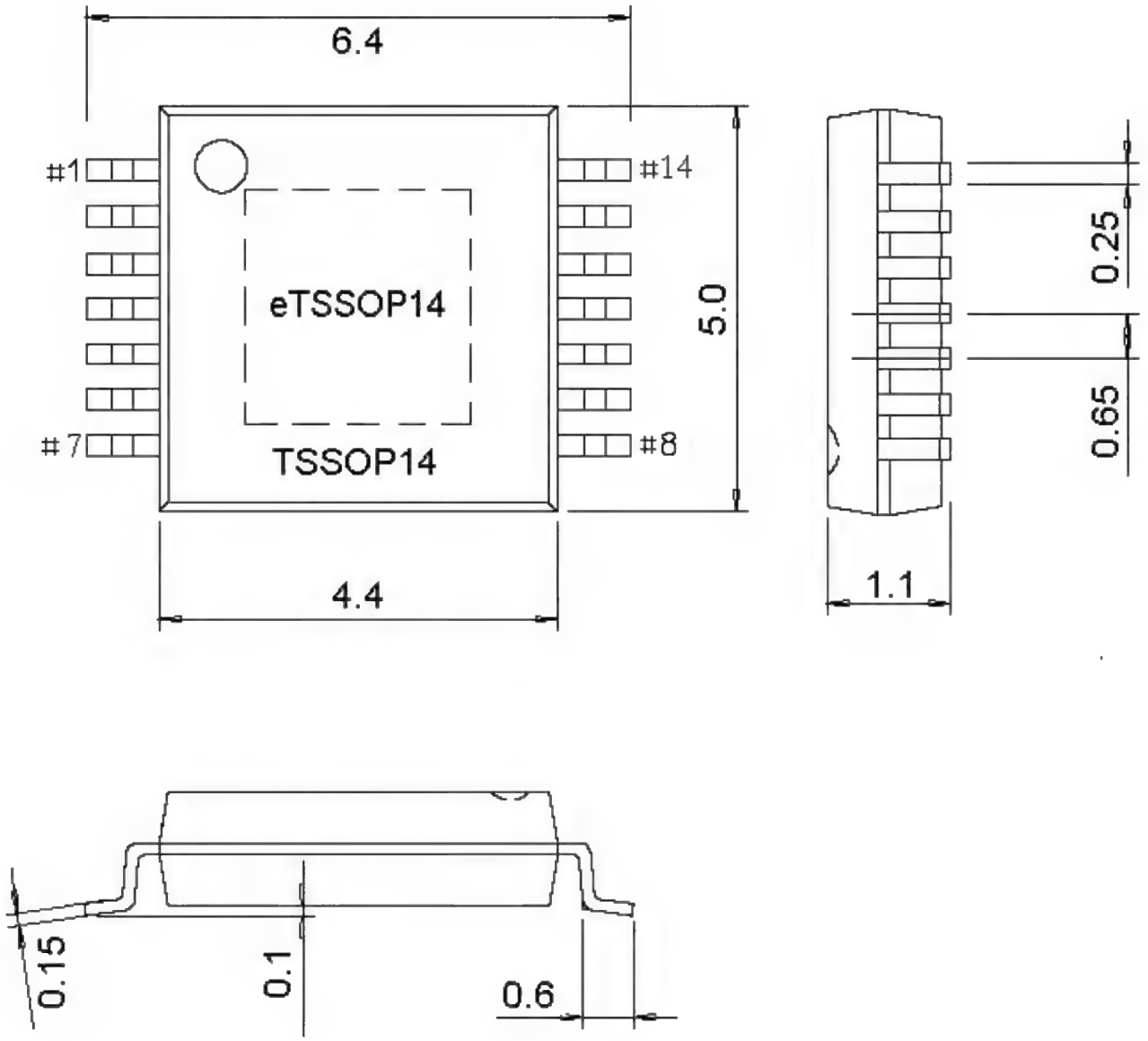

- **TSSOP16, eTSSOP16**

eTSSOP16 Exposed Pad: 2.8*3.0

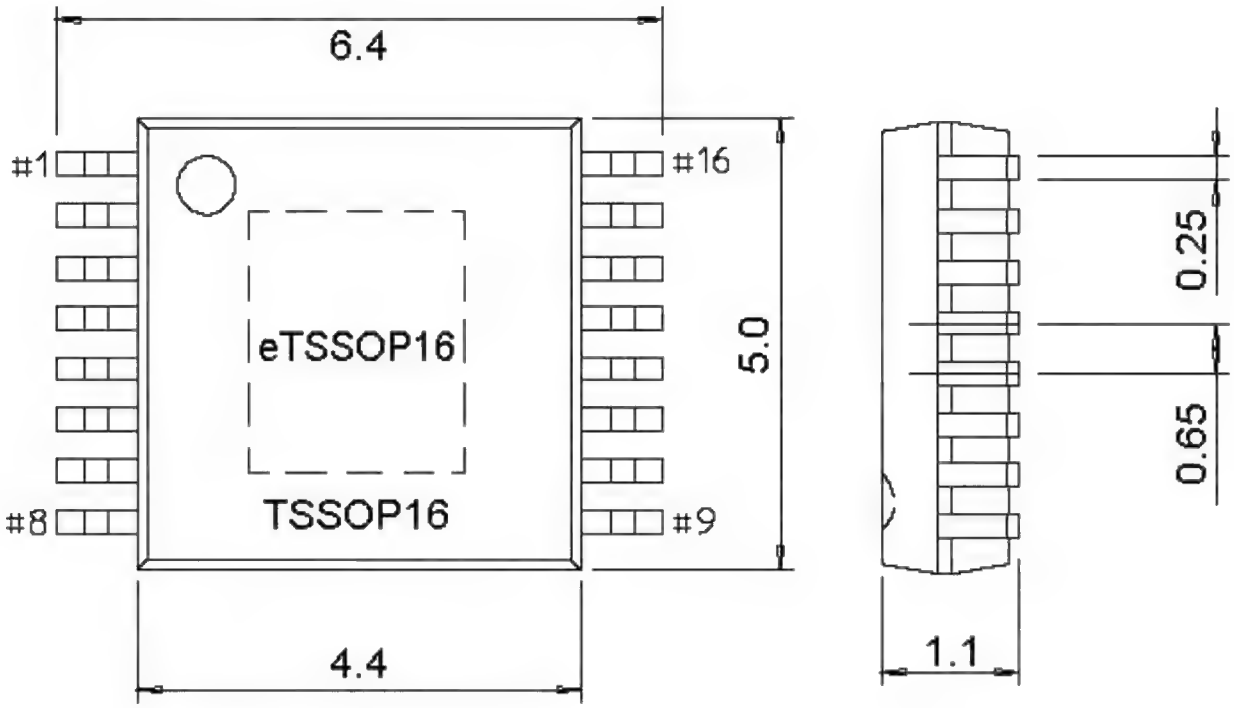

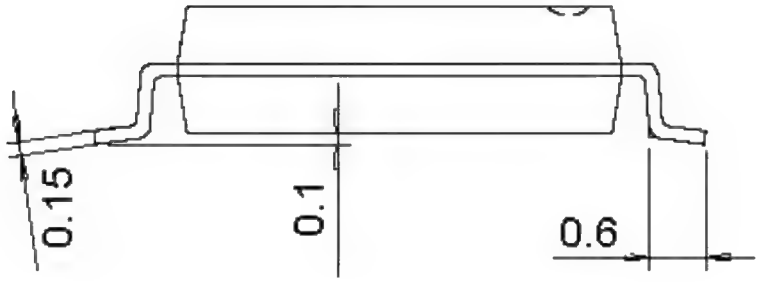

- **TSSOP20, eTSSOP20**

eTSSOP20 Exposed Pad: 3.0*4.2

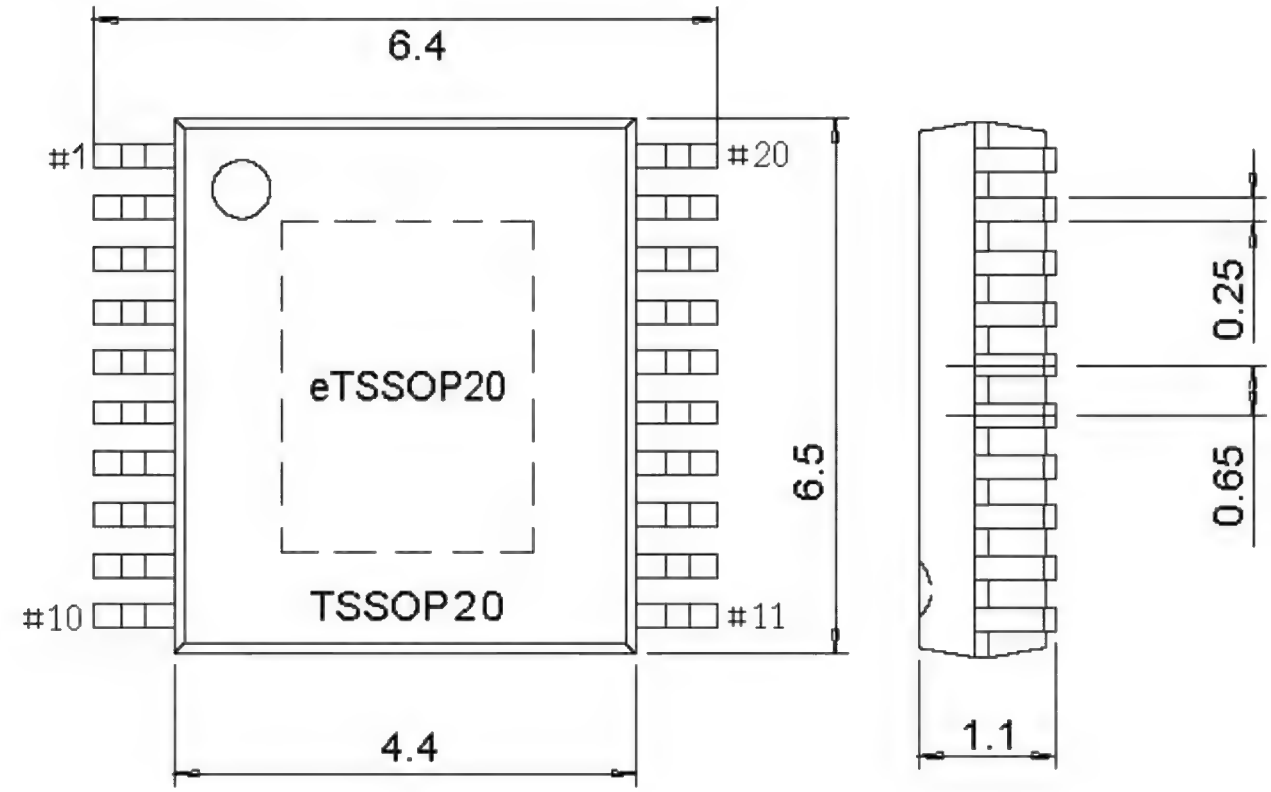

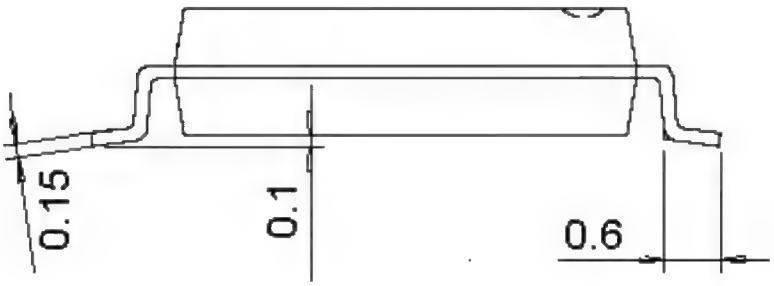

- **TSSOP24**

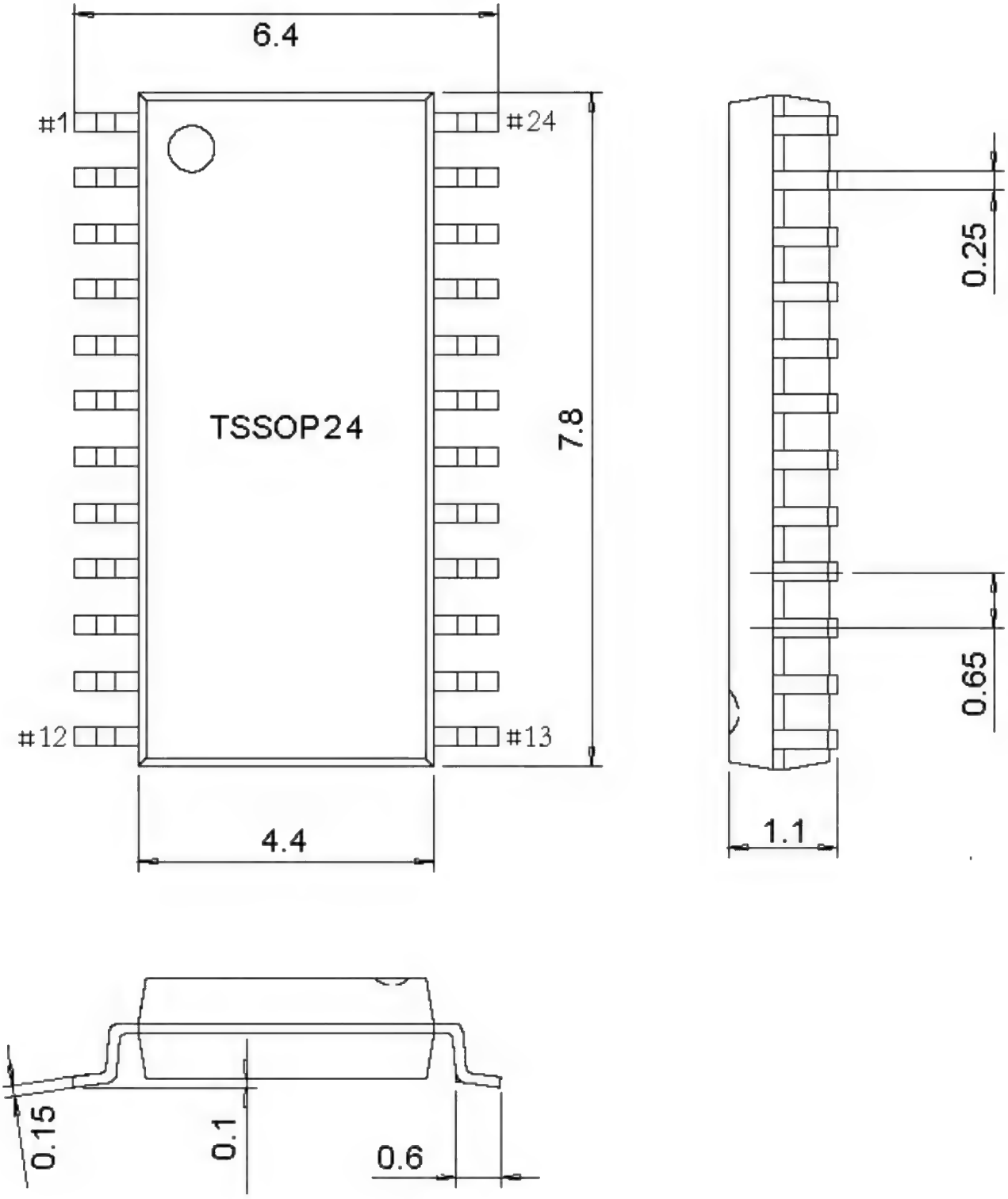

- **TSSOP28**

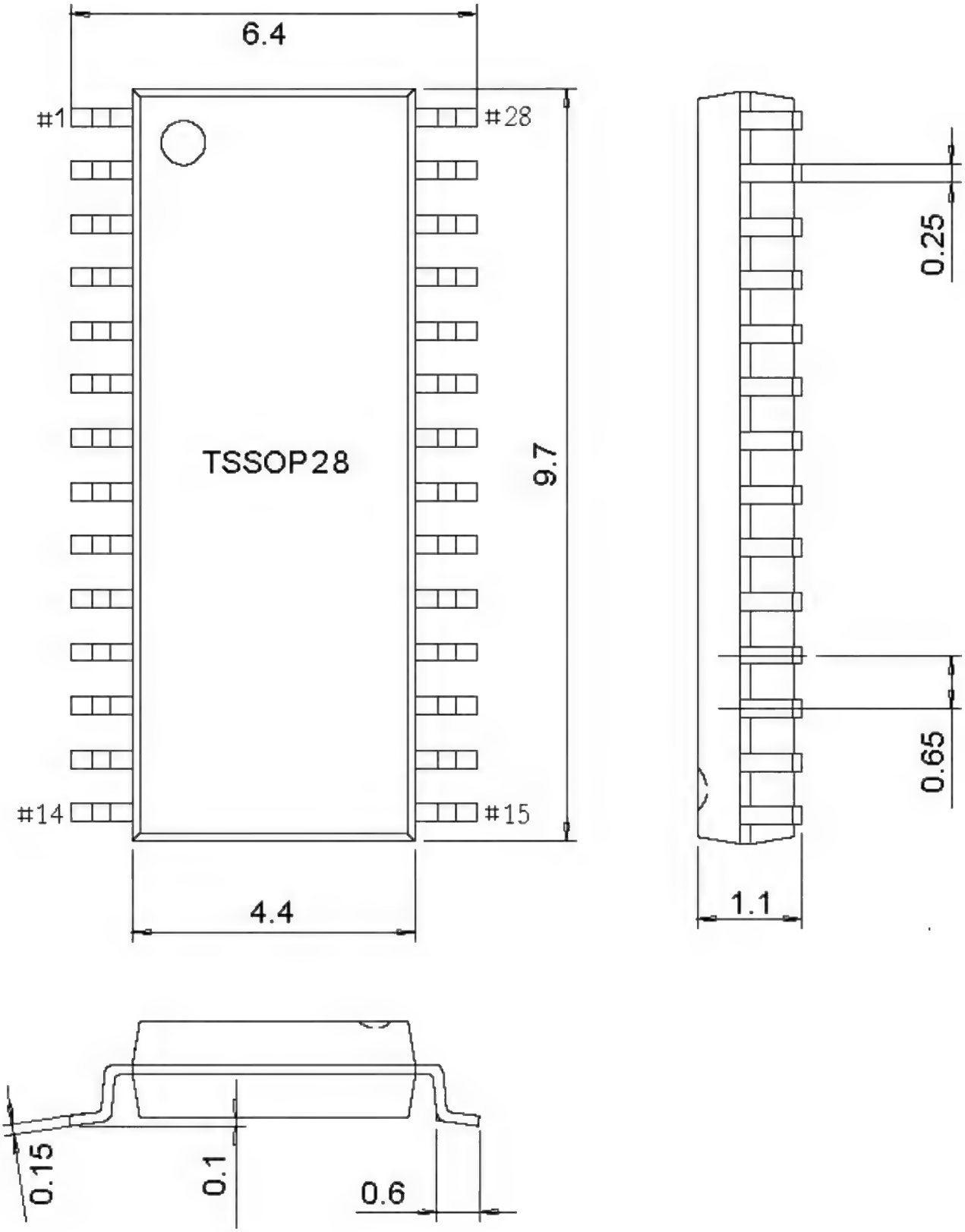

QSOP Type (3.9mm, 150mil) (SSOP-150)

- **QSOP16 (SSOP16-150mil-0.635)**

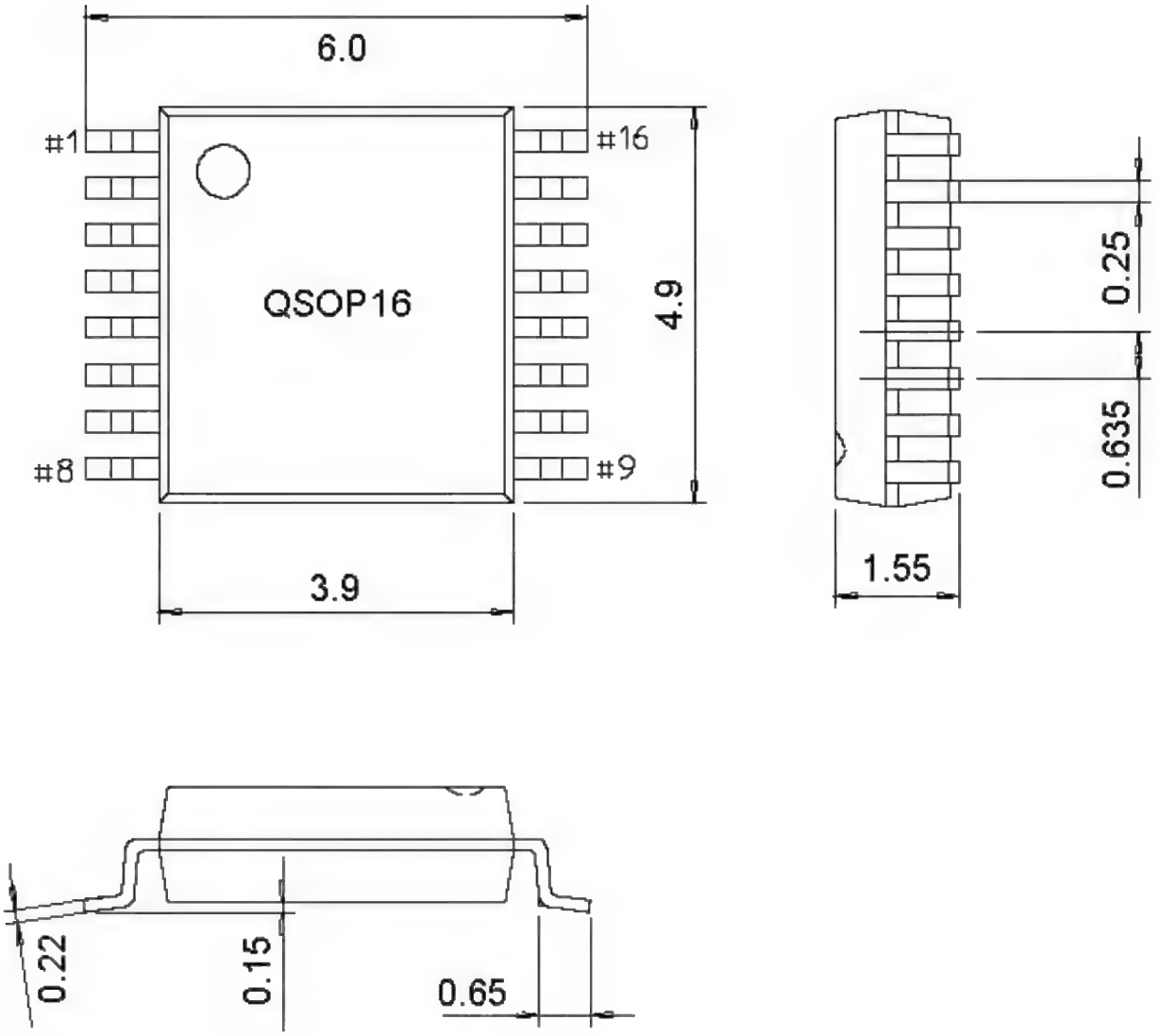

- **QSOP20 (SSOP20-150mil-0.635)**

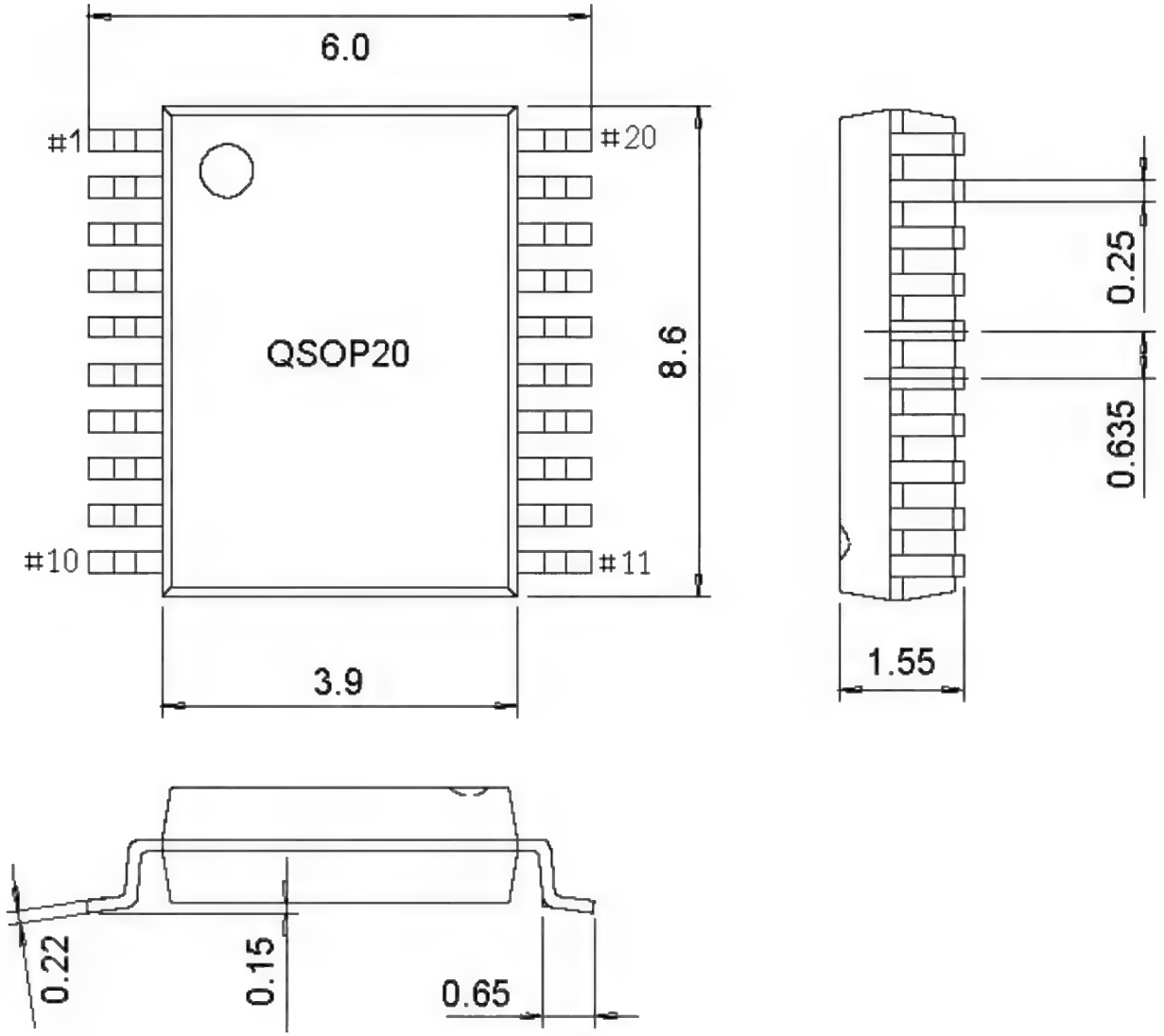

- **QSOP24 (SSOP24-150mil-0.635)**

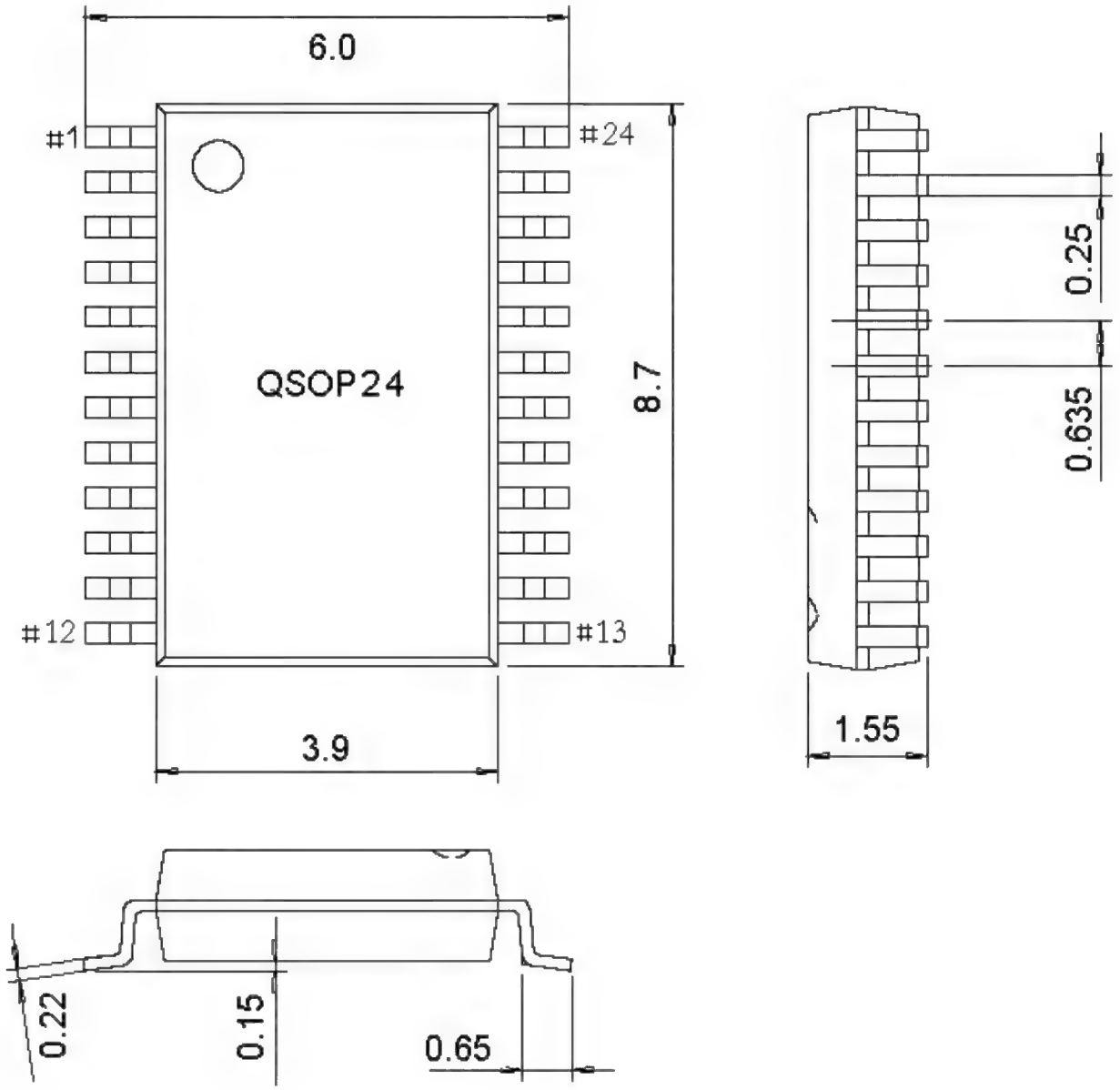

- **QSOP28 (SSOP28-150mil-0.635)**

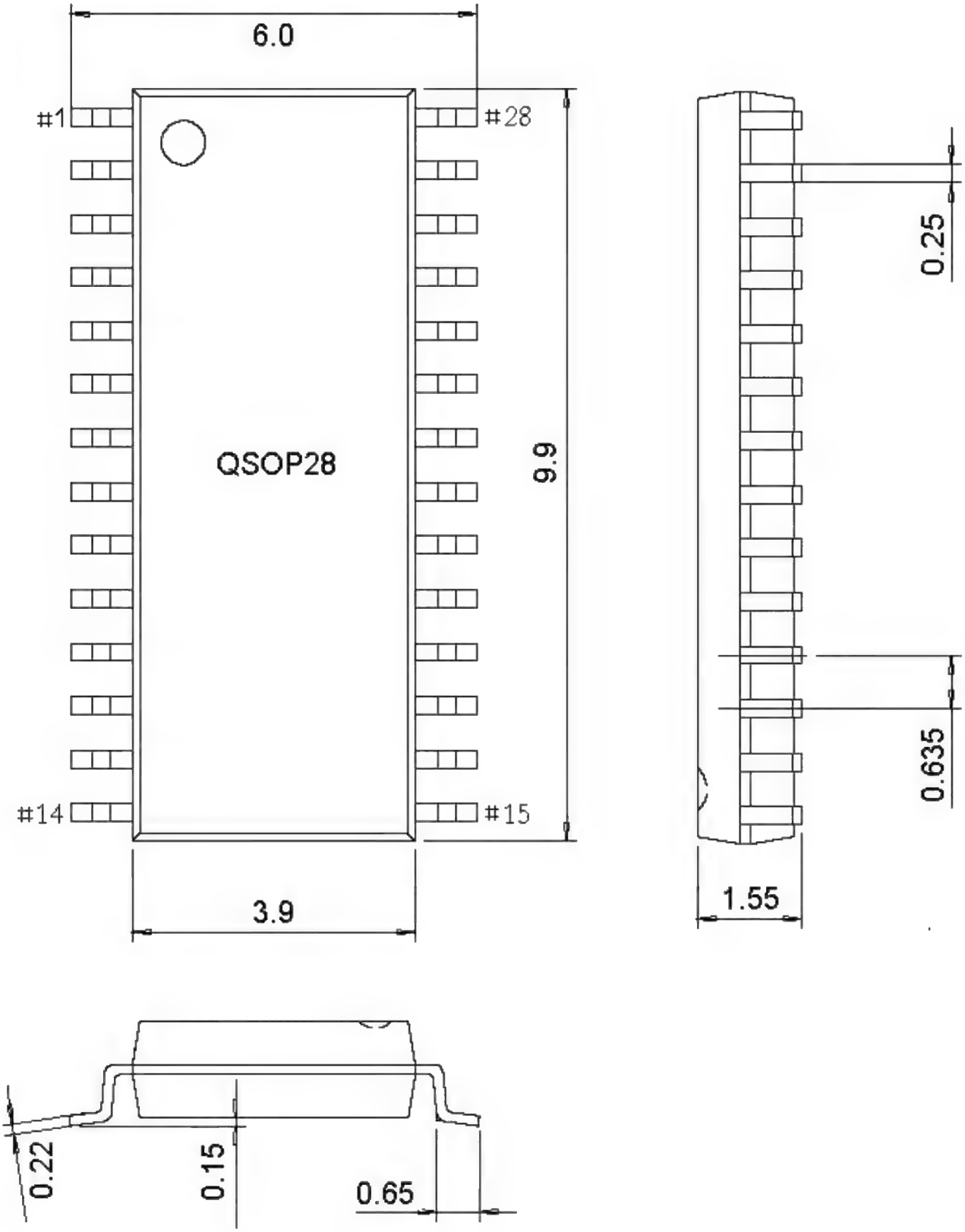

QFP Type (PQFP, LQFP, TQFP)

- **PQFP44 (QFP44)**

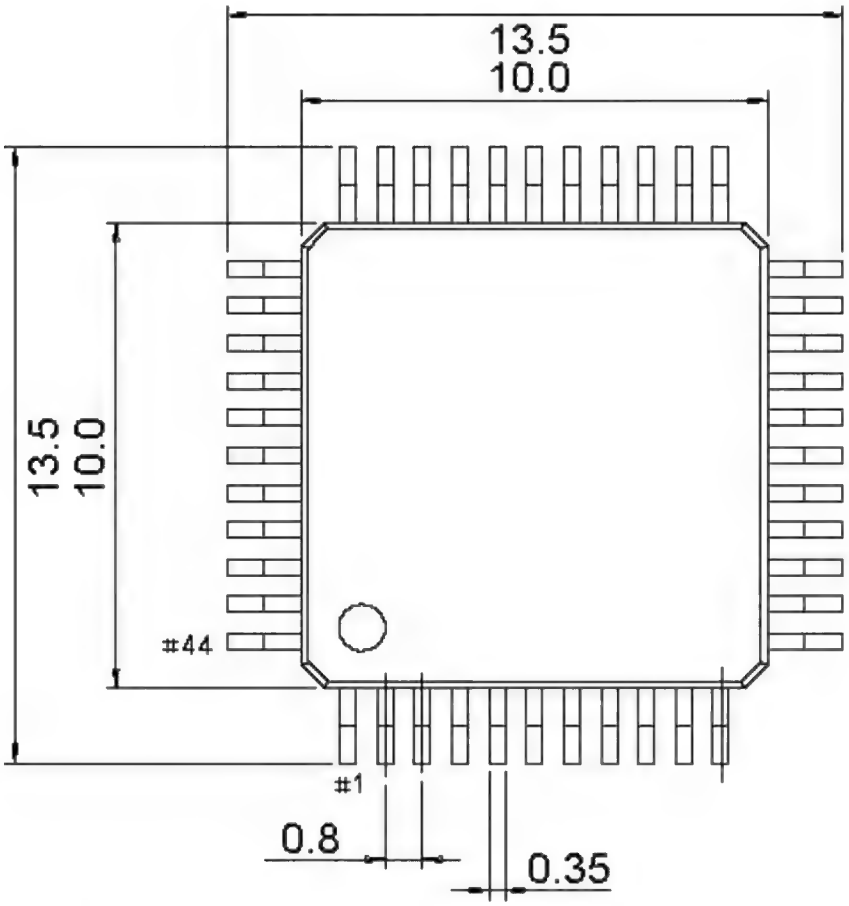

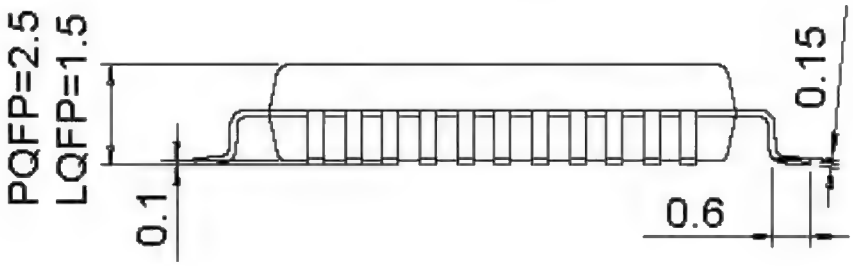

- **PQFP52 (QFP52)**

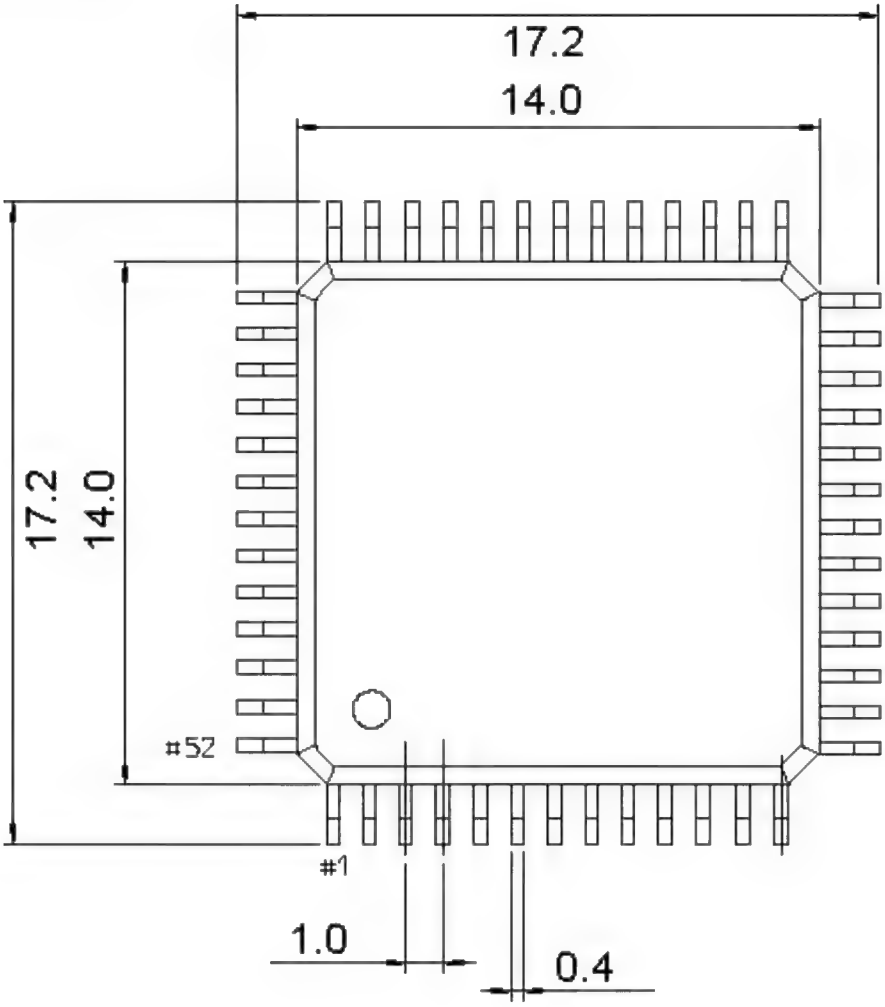

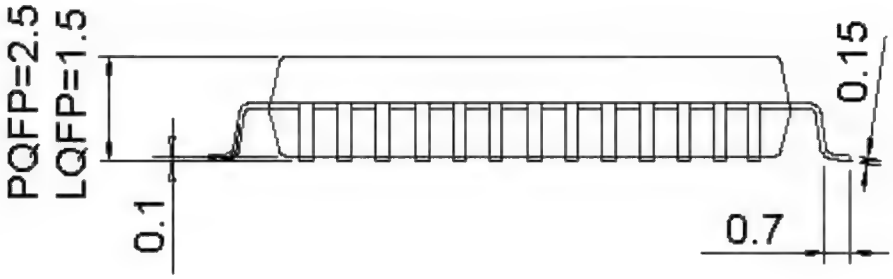

- **PQFP64 (QFP64), LQFP64-14*14**

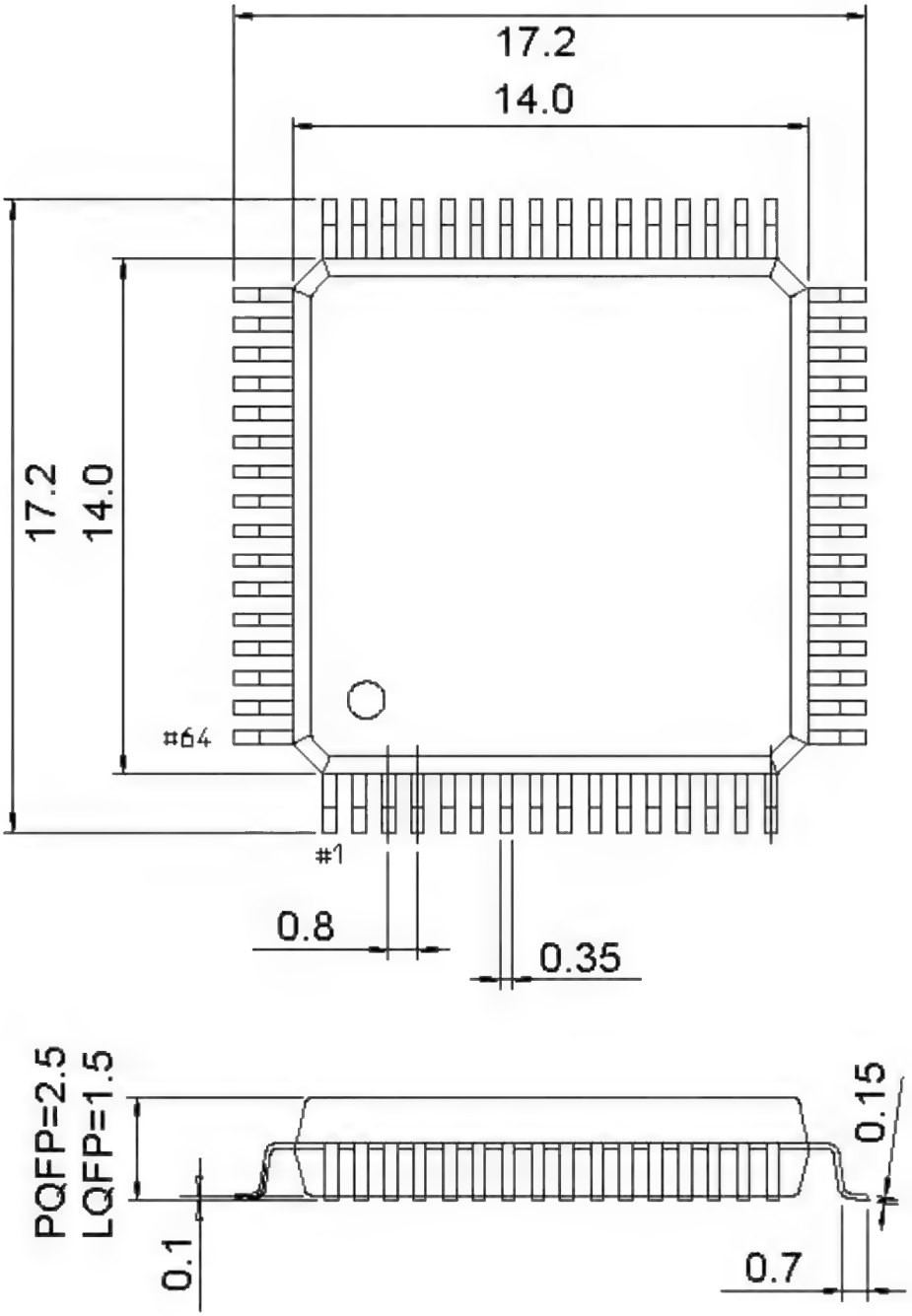

- **PQFP80 (QFP80)**

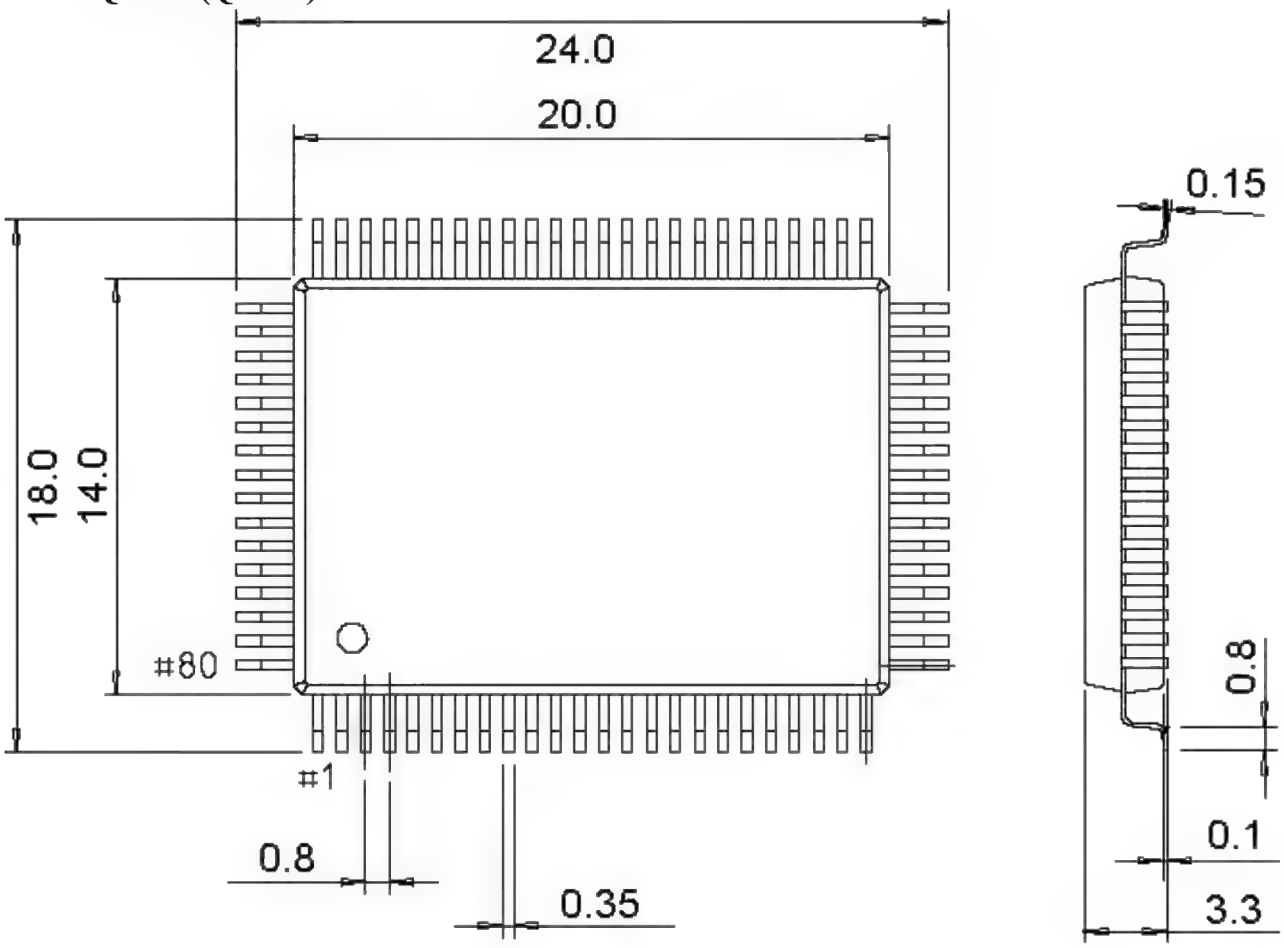

- **LQFP32 (LQFP32-7*7)**

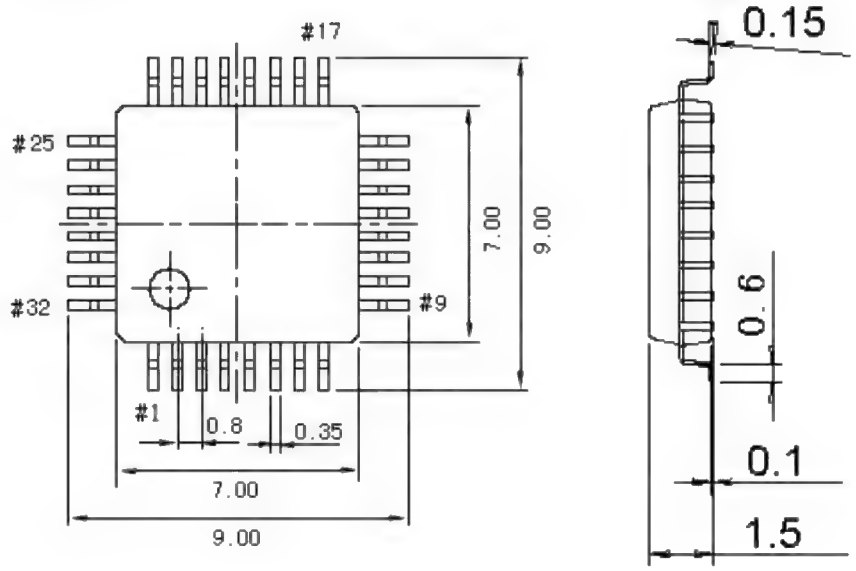

- **LQFP44 (LQFP44-10*10)**

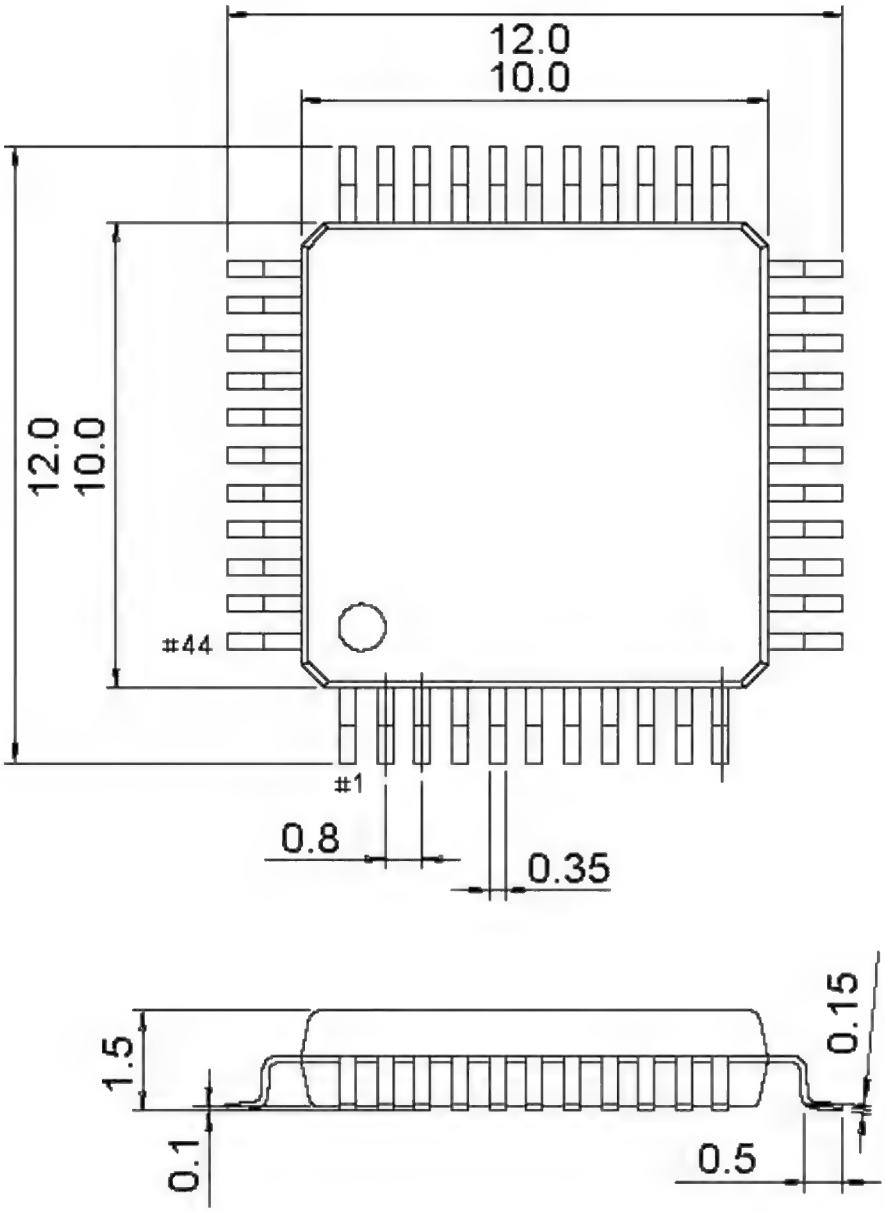

- **LQFP48 (LQFP48-7*7), TQFP48、eLQFP48**

eLQFP48 Exposed Pad：3.2*3.2

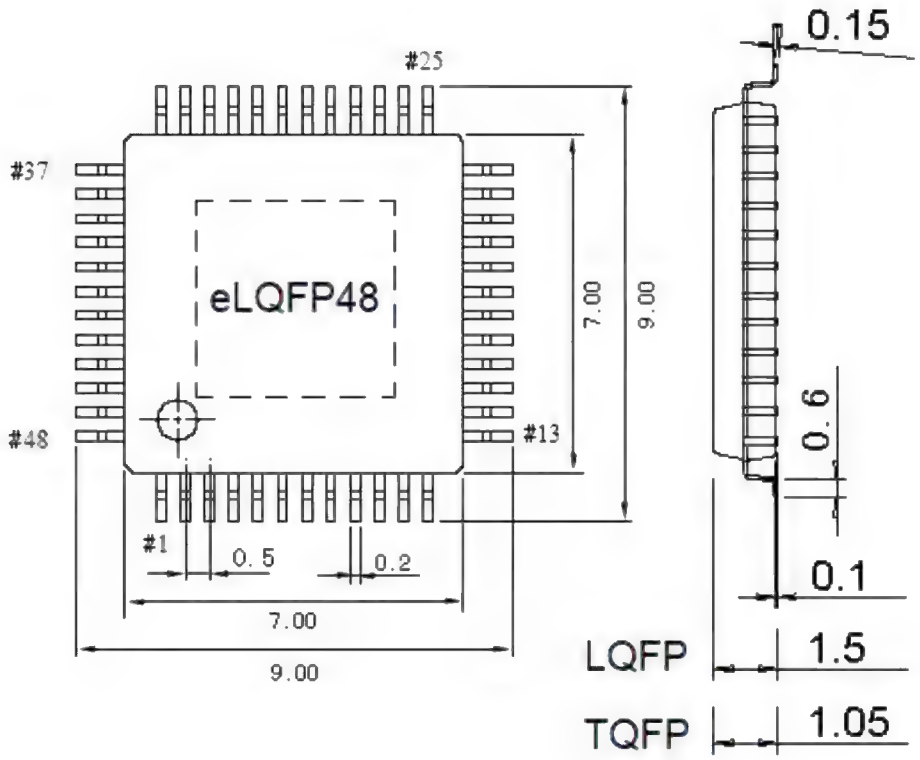

- **LQFP64 (LQFP64-7*7), TQFP64, eLQFP64**

eLQFP64 Exposed Pad: 3.2*3.2

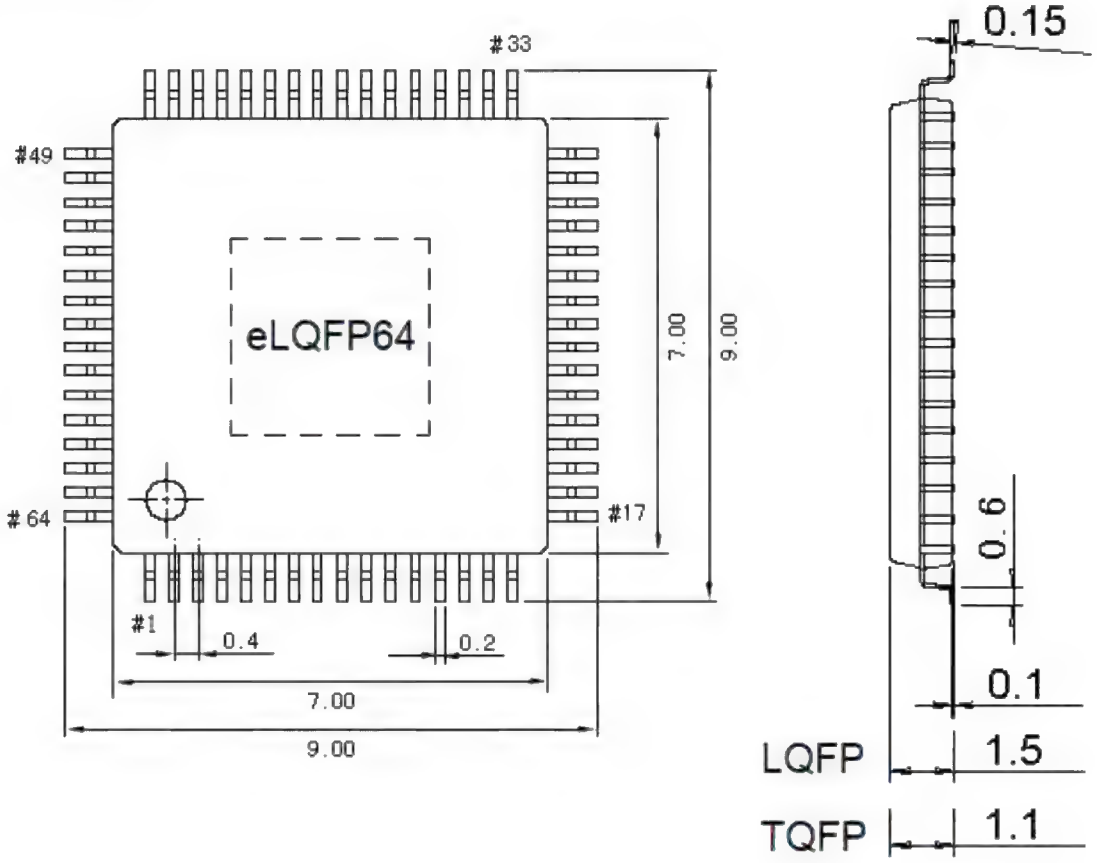

- **LQFP64M (LQFP64-10*10)**

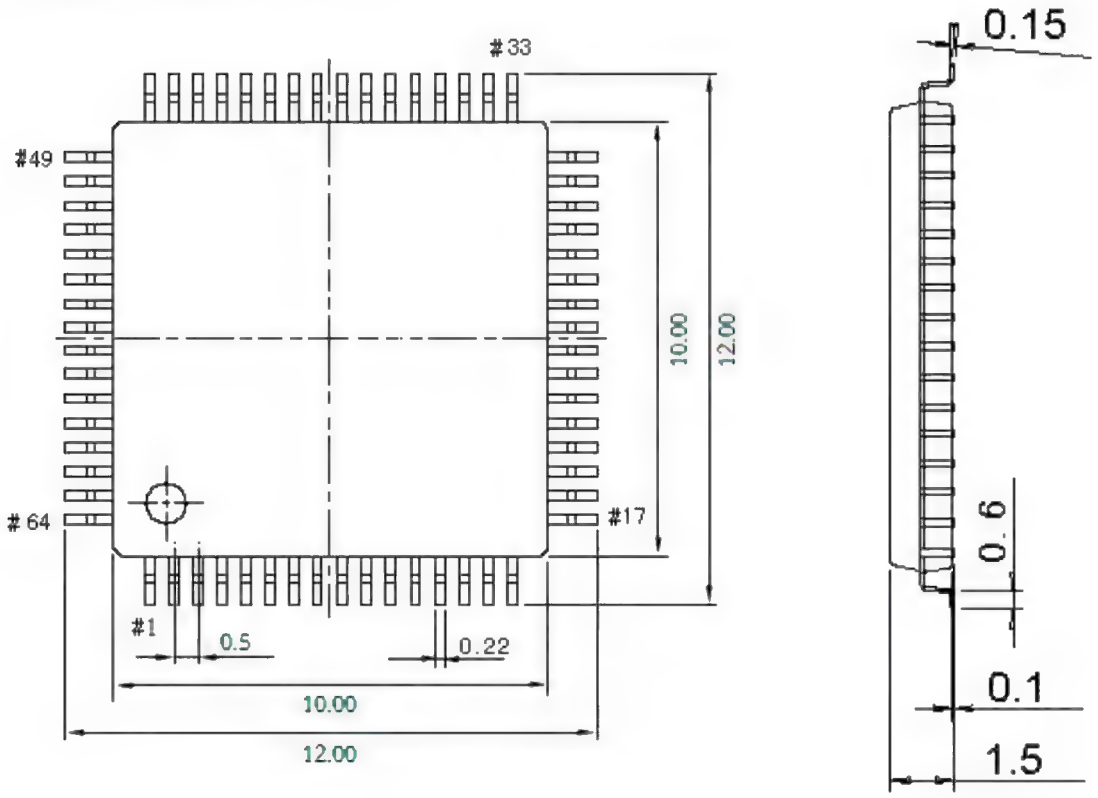

- **LQFP80 (LQFP80-12*12)**

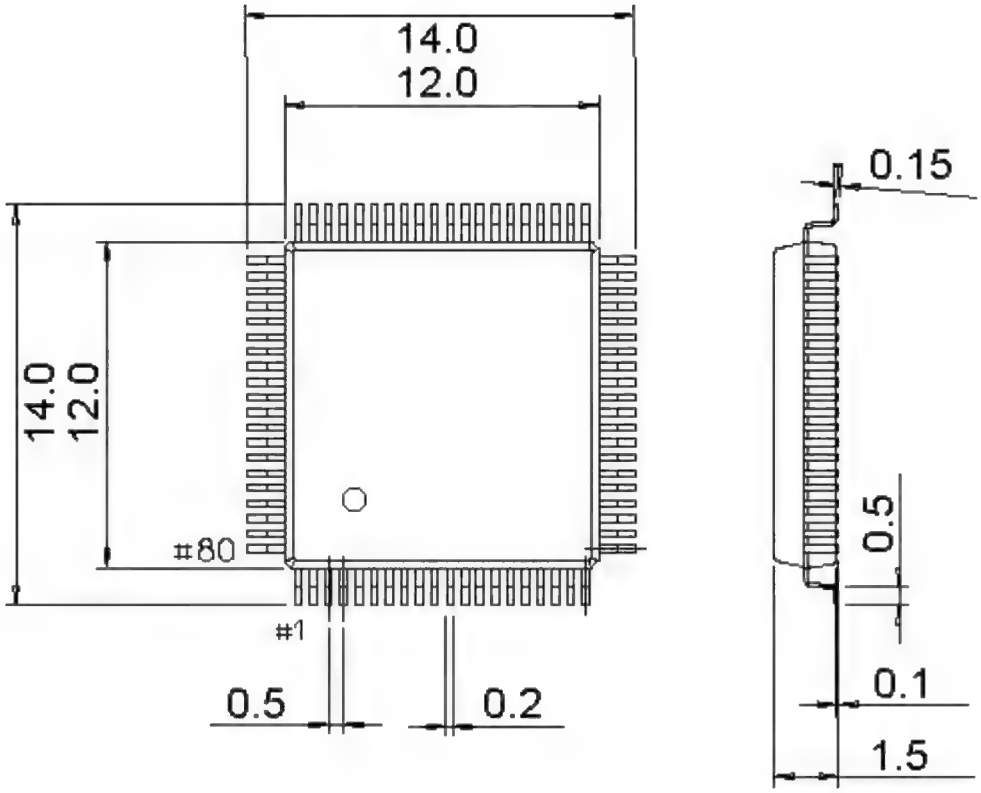

- **LQFP100 (LQFP100-14*14)**

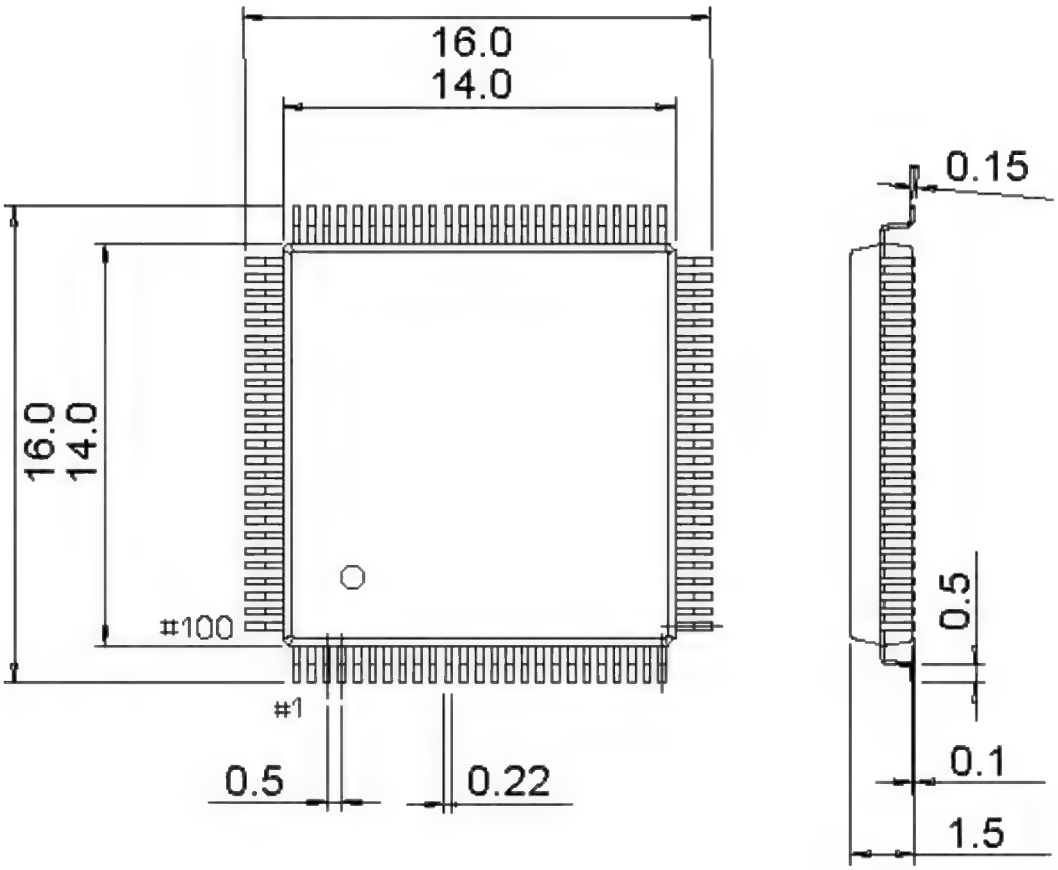

. **LQFP128 (LQFP128-14*14)**

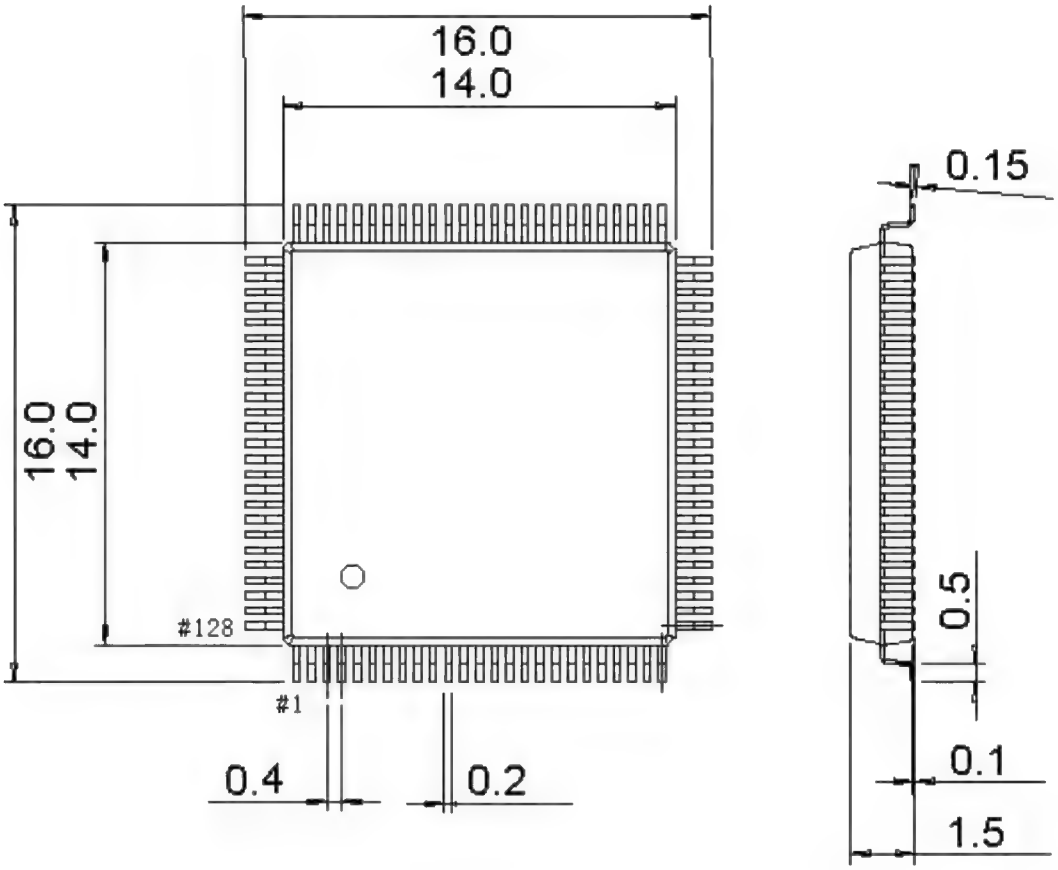

- **LQFP144 (LQFP144-20*20)**

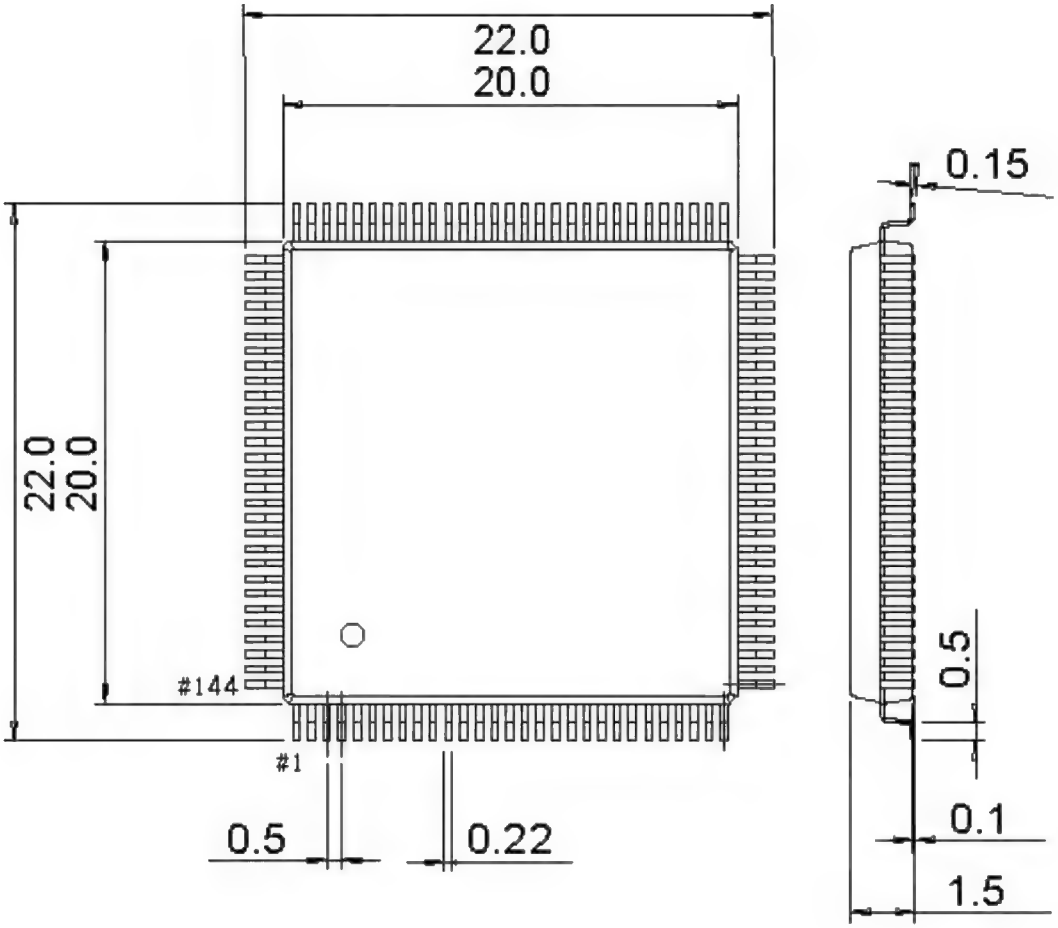

QFN Type

. QFN/DFN Naming Rules Reference

Standard naming

QFN ab - d * e * t - p

Number ab: QFN package 4-side cumulative pin count, currently up to 128.

Numbers d and e: d and e represent the length and width of the QFN shape (The side where pin 1# is located).

Number t: t stands for the thickness of the QFN profile. 0.75 and 0.55 are more commonly used, as well as 0.85, 0.5, 0.4 and so on.

Number p: p on behalf of the pin pitch, that is, the distance between the center of adjacent pins, if there are 2 kinds of take its small, 0.4 and 0.5 are more commonly used, and another 0.35, 0.65, 0.45, 0.3 and so on.

Reference simplified naming

QFN ab c d X e

Number ab: QFN package 4-side cumulative pin count, currently up to 128.

Letter c: no c represents general-purpose QFN with Exposed Pad, default size, no numbers d and e;

Letter X represents general-purpose QFN with Exposed Pad, non-default size, at least number d;

Letter L represents general-purpose QFN without Exposed Pad, non-default size, at least number d;

Letter C represents WCH-designed general-purpose QFN with Exposed Pad, at least number d;

Letter F represents WCH-customized dedicated QFN without Exposed Pad, at least number d;

Letter E represents WCH-customized specialized QFN with Exposed Pad, at least number d.

Numbers d and e: d and e represent the length and width of the QFN profile (The side where pin 1# is located);

No d no e represents the default size, which is also the common size;

With d without e means the size is d*d square;

If the number exceeds 13 then divide by 10, e.g. 45 means 4.5.

The default size is usually the smallest square size when pitch=0.4, which is also the common size:

QFN12, QFN14 defaults to 2*2 square;

QFN16, QFN20 defaults to 3*3 square;

QFN24, QFN28, QFN32 defaults to 4*4 square;

QFN36, QFN40, QFN44 defaults to 5*5 square.

Take QFN20 for example:

QFN20: General-purpose QFN with Exposed Pad, default size (QFN20 is 3*3 by default);

QFN20X4: General-purpose QFN with Exposed Pad, size 4*4;

QFN20X25X45: General-purpose QFN with Exposed Pad, size 2.5*4.5;

QFN20C2: WCH-designed general-purpose QFN with Exposed Pad, size 2*2;

QFN20F3: WCH-customized special QFN, without Exposed Pad, size 3*3;

QFN20E3X4: WCH-customized special QFN with Exposed Pad, size 3*4.

- **QFN10L14X18 (QFN10-1.4*1.8*0.55-0.4)**

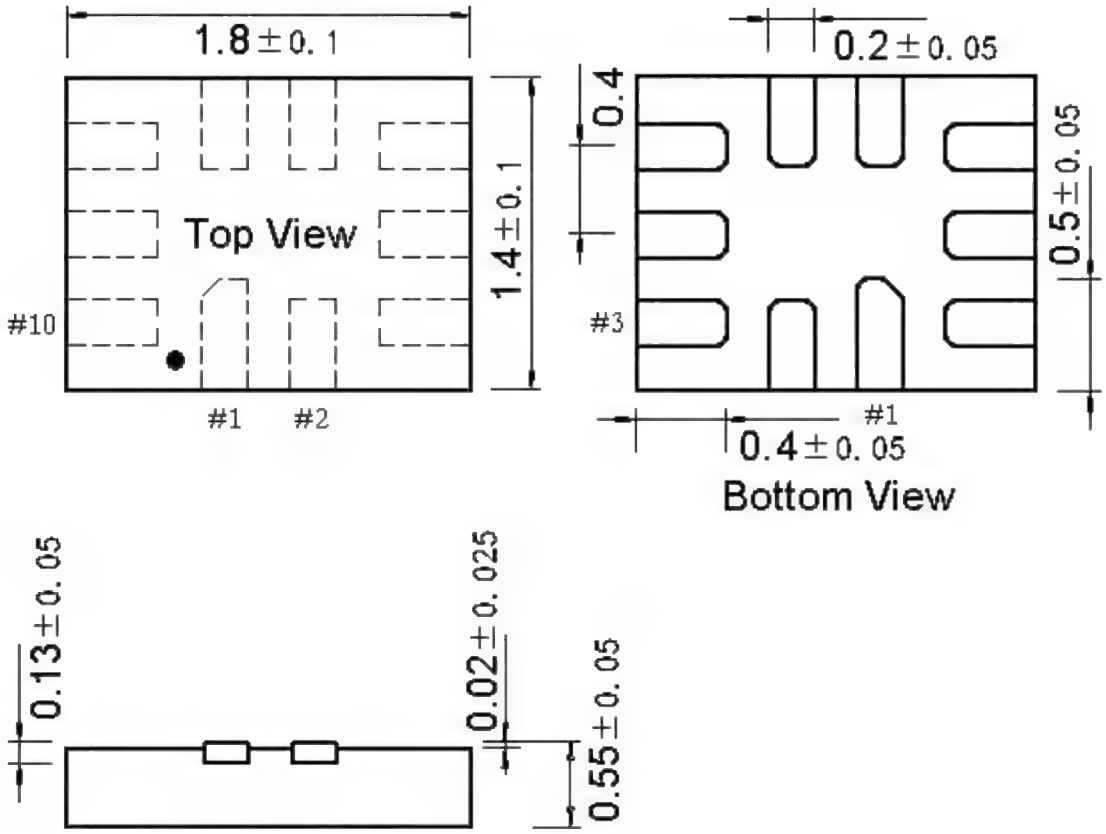

- **QFN10L15X2 (QFN10-1.5*2*0.55-0.4)**

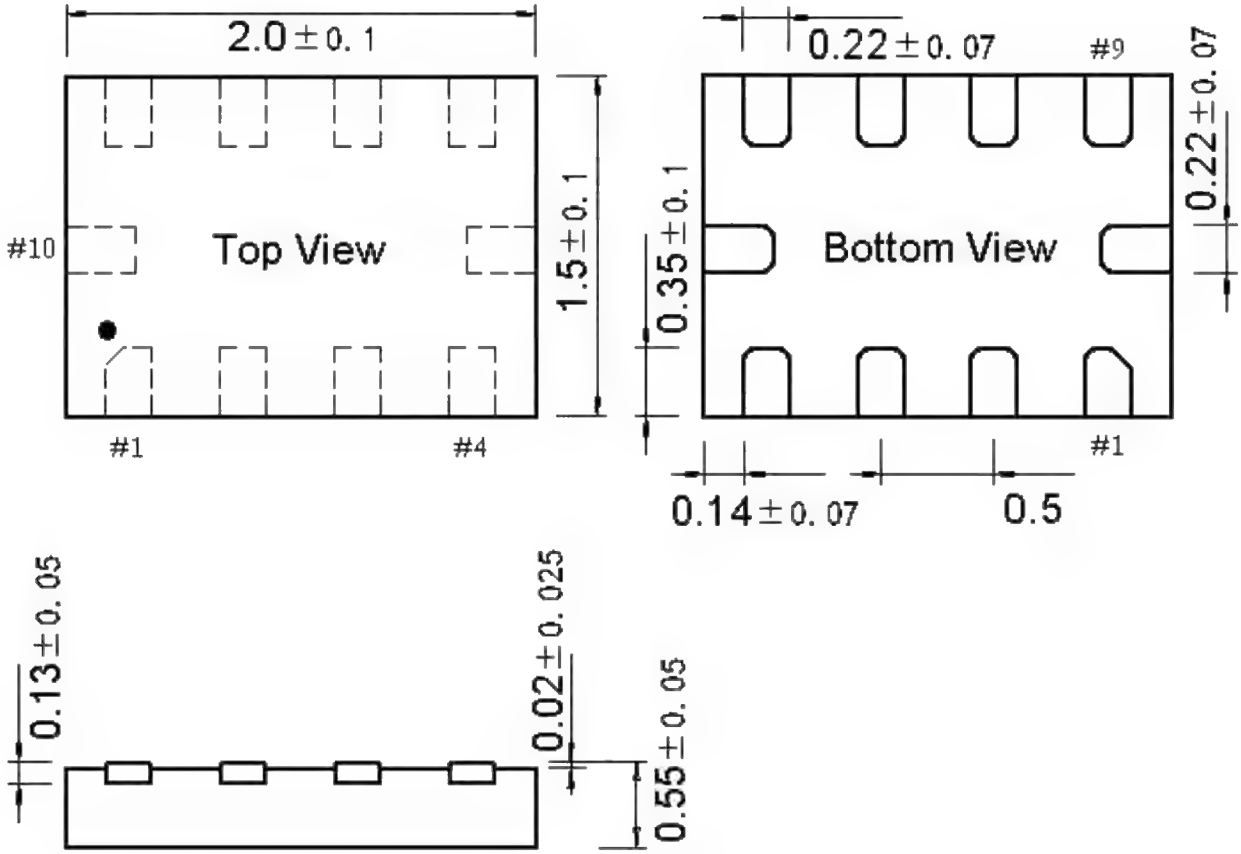

- **QFN12 (QFN12-2*2*0.5-0.4)**

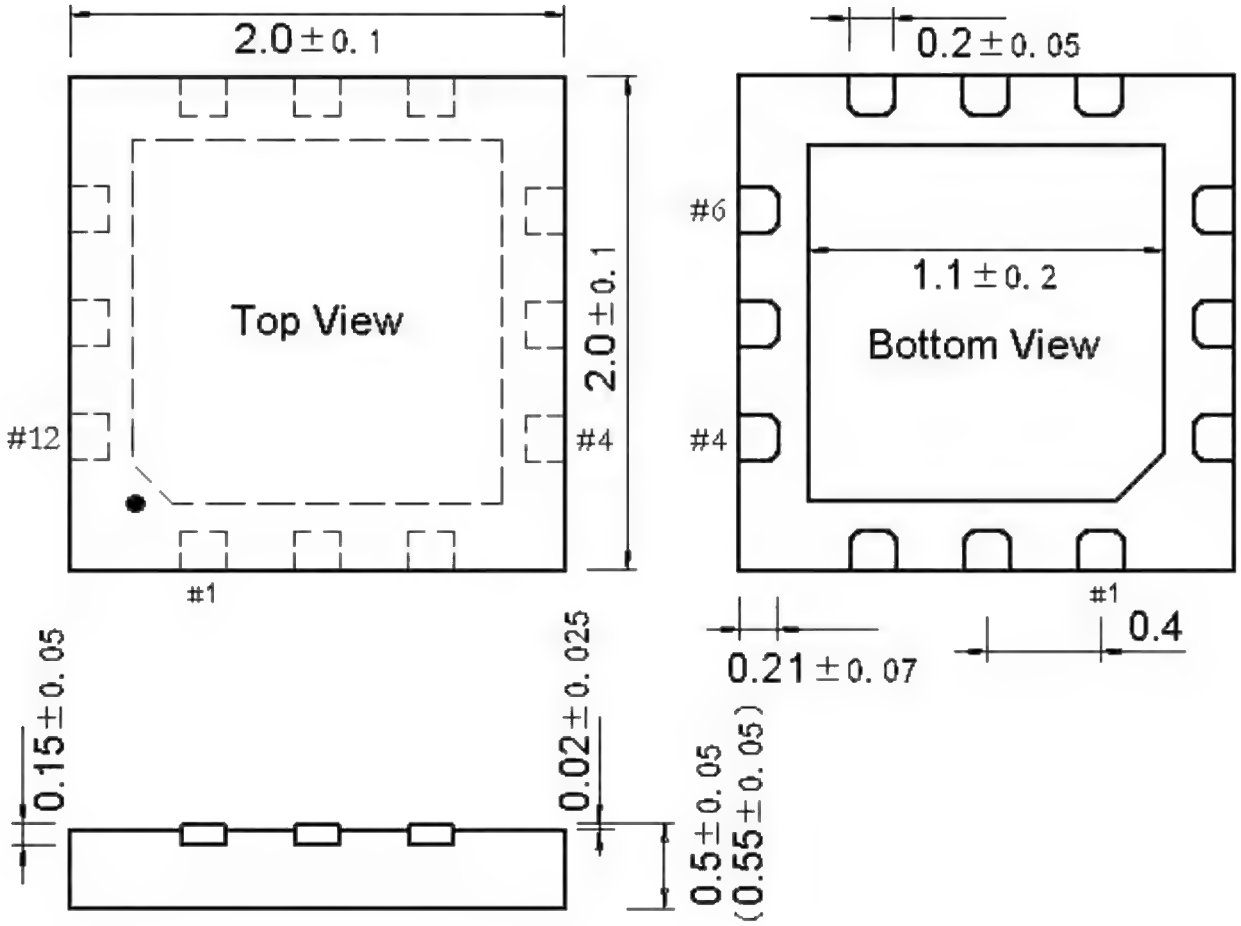

- **QFN14 (QFN14-2*2*0.55-0.4)**

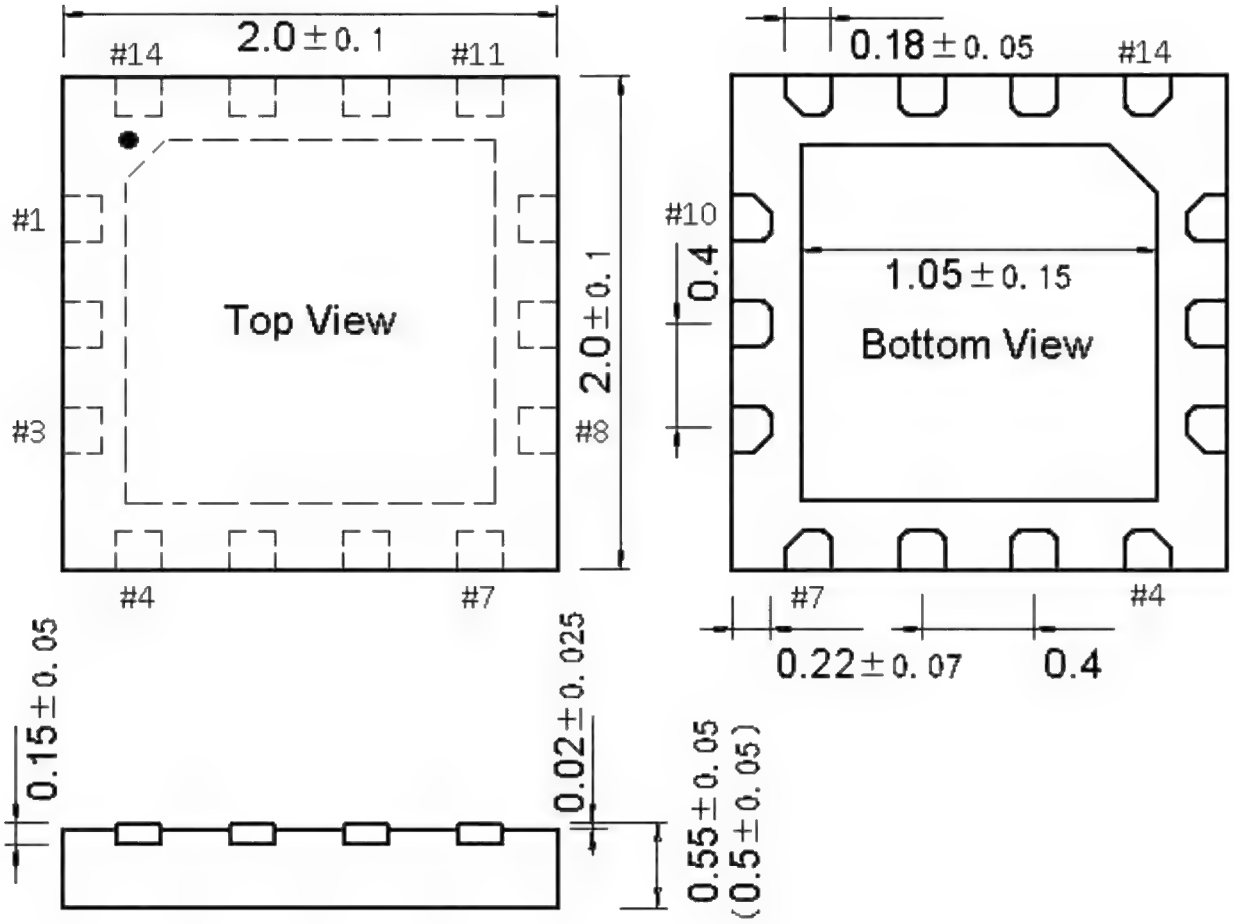

- **QFN14X25 (QFN14-2.5*2.5*0.75-0.5)**

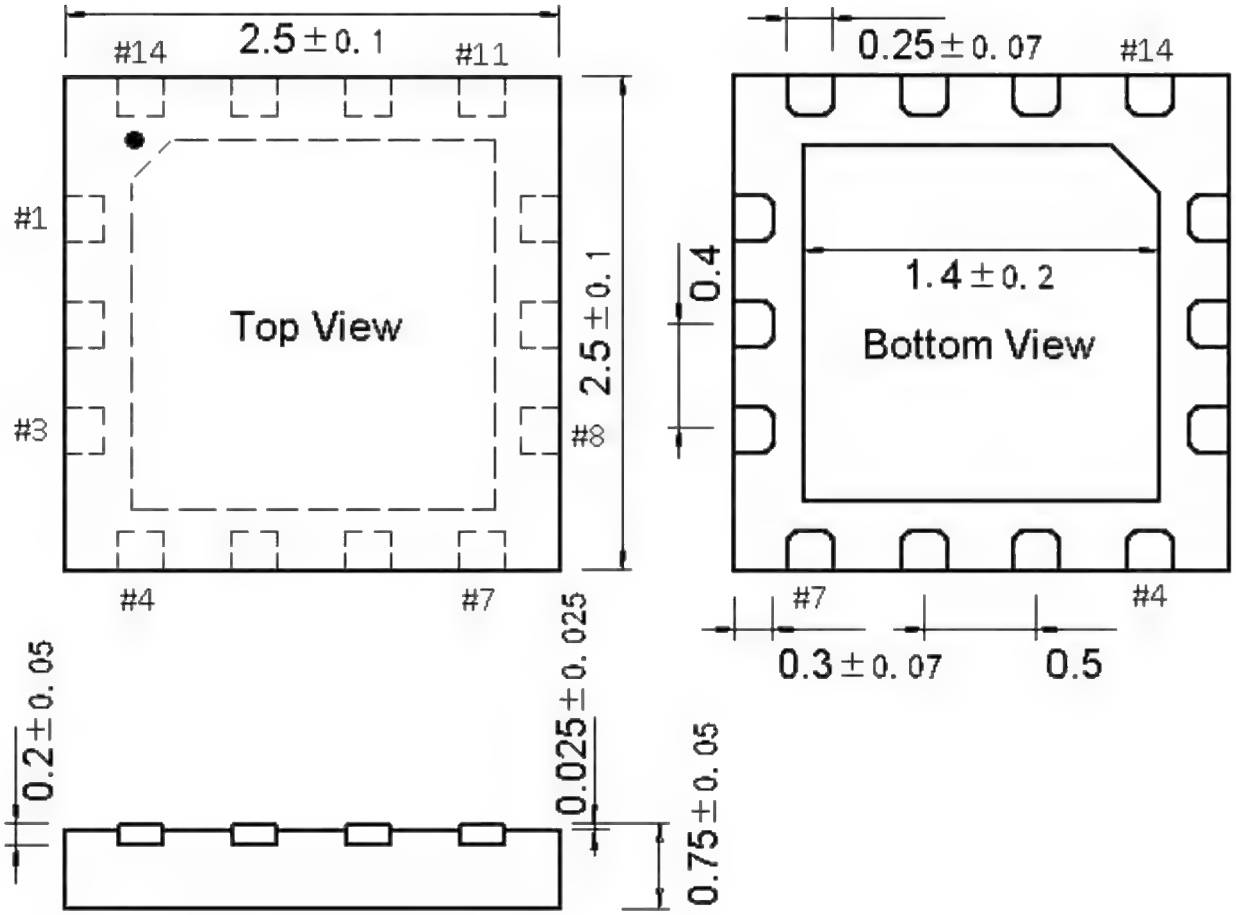

- **QFN16C2 (QFN16C-2*2*0.55-0.4)**

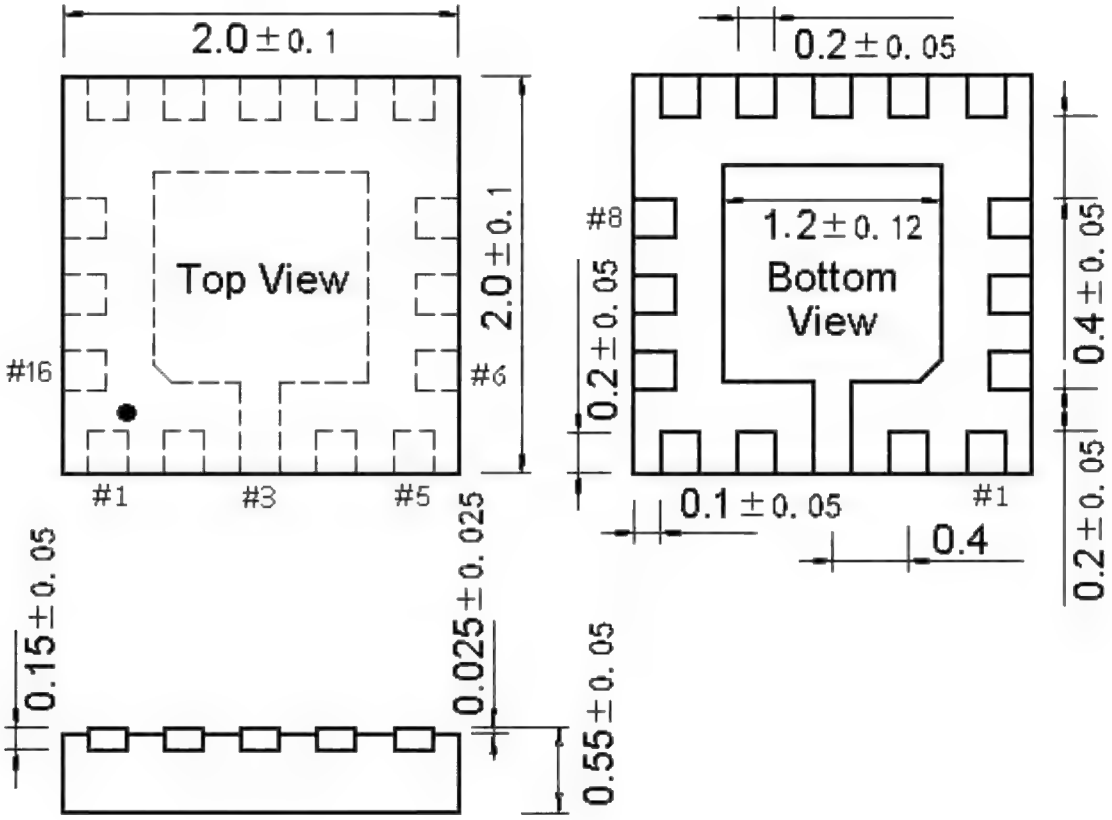

- **QFN16 (QFN16-3*3)**

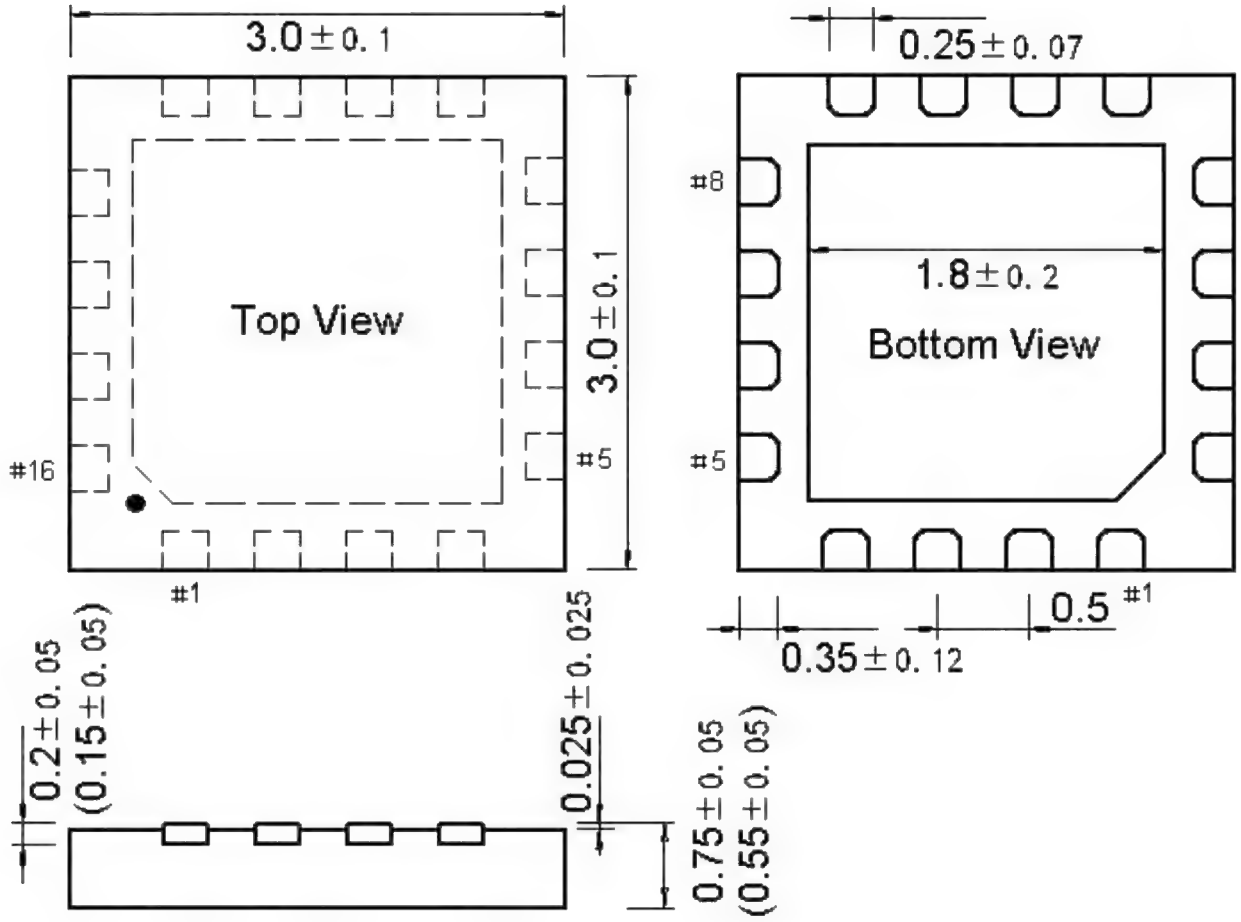

- **QFN16-3*3*0.5-0.4**

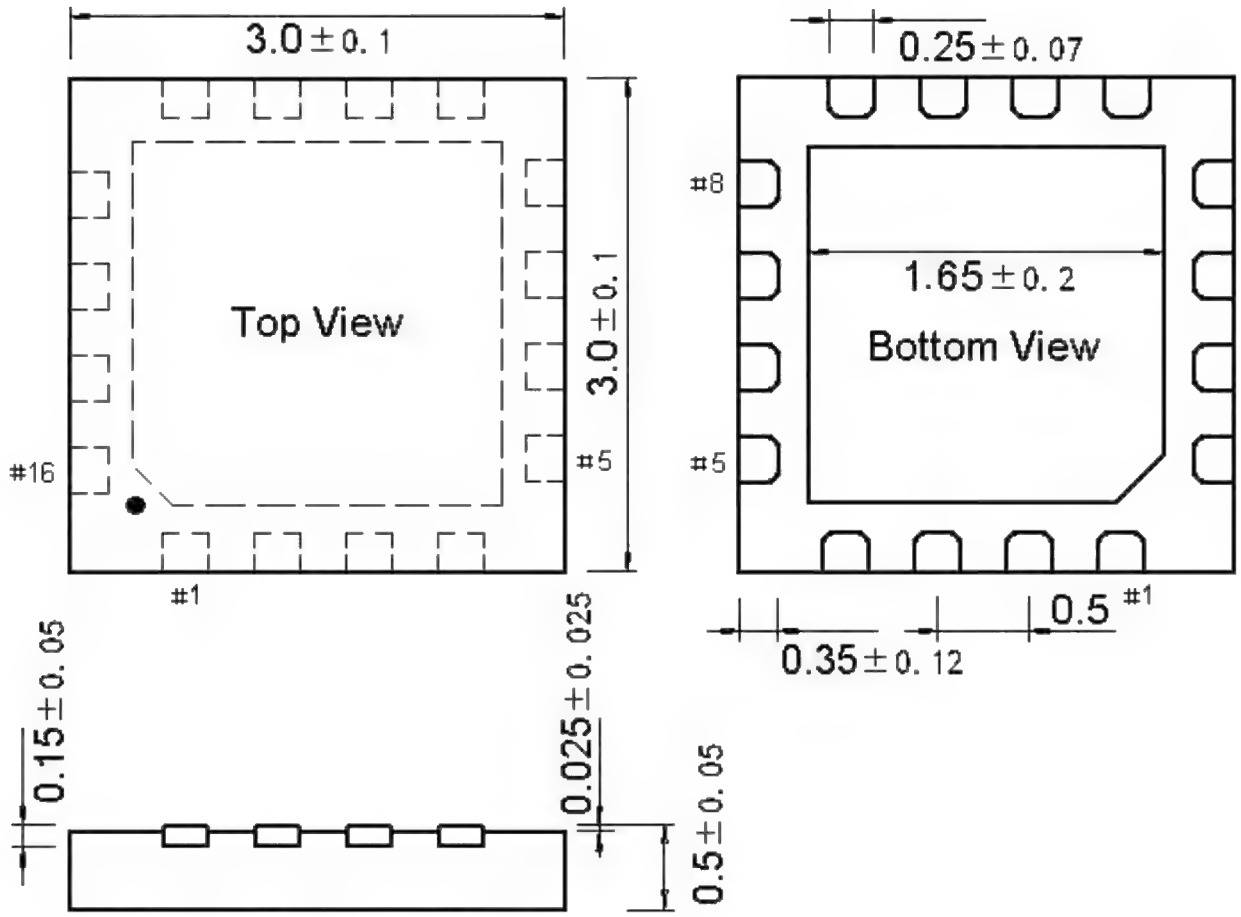

- **QFN16X4 (QFN16-4*4)**

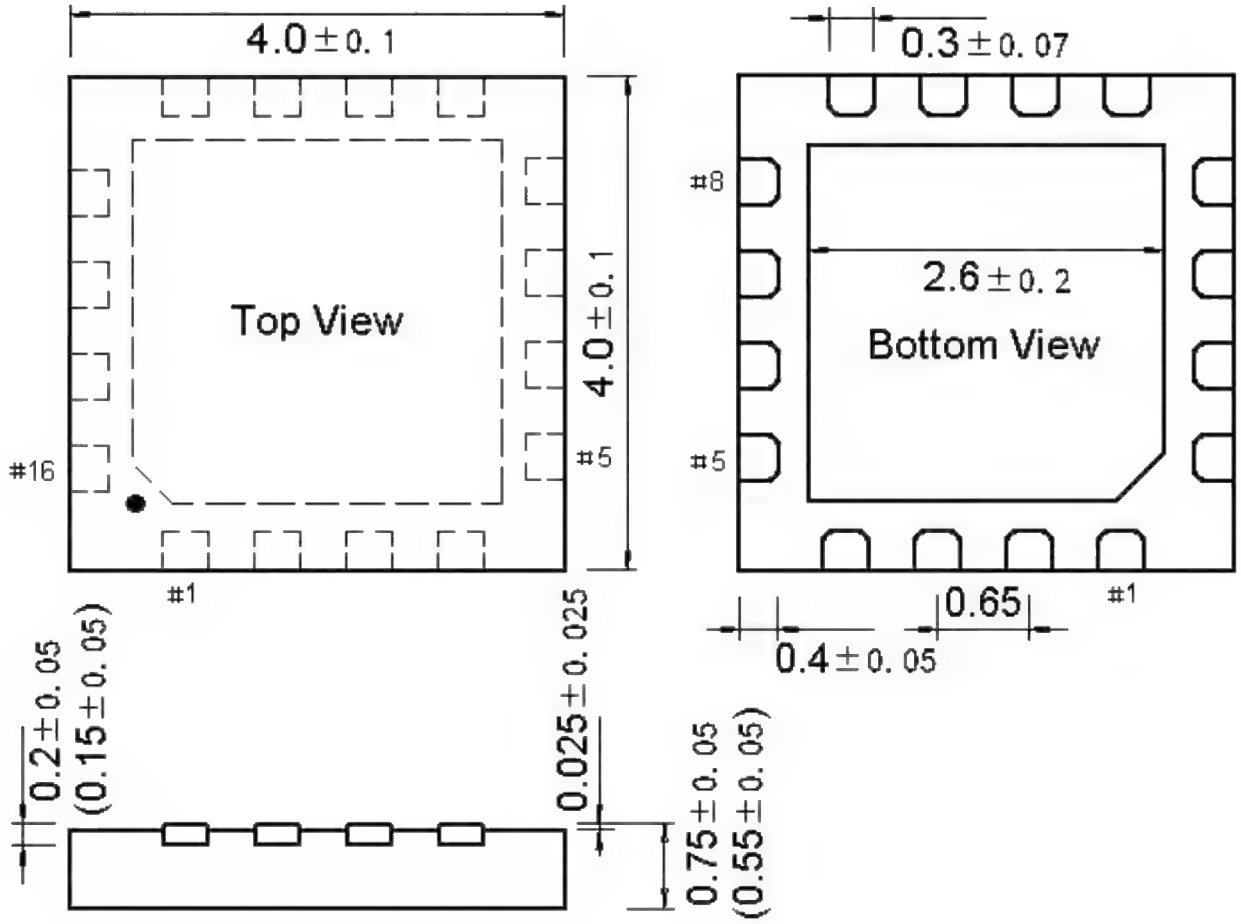

- **QFN18X2X28 (QFN18-2*2.8*0.5-0.4)**

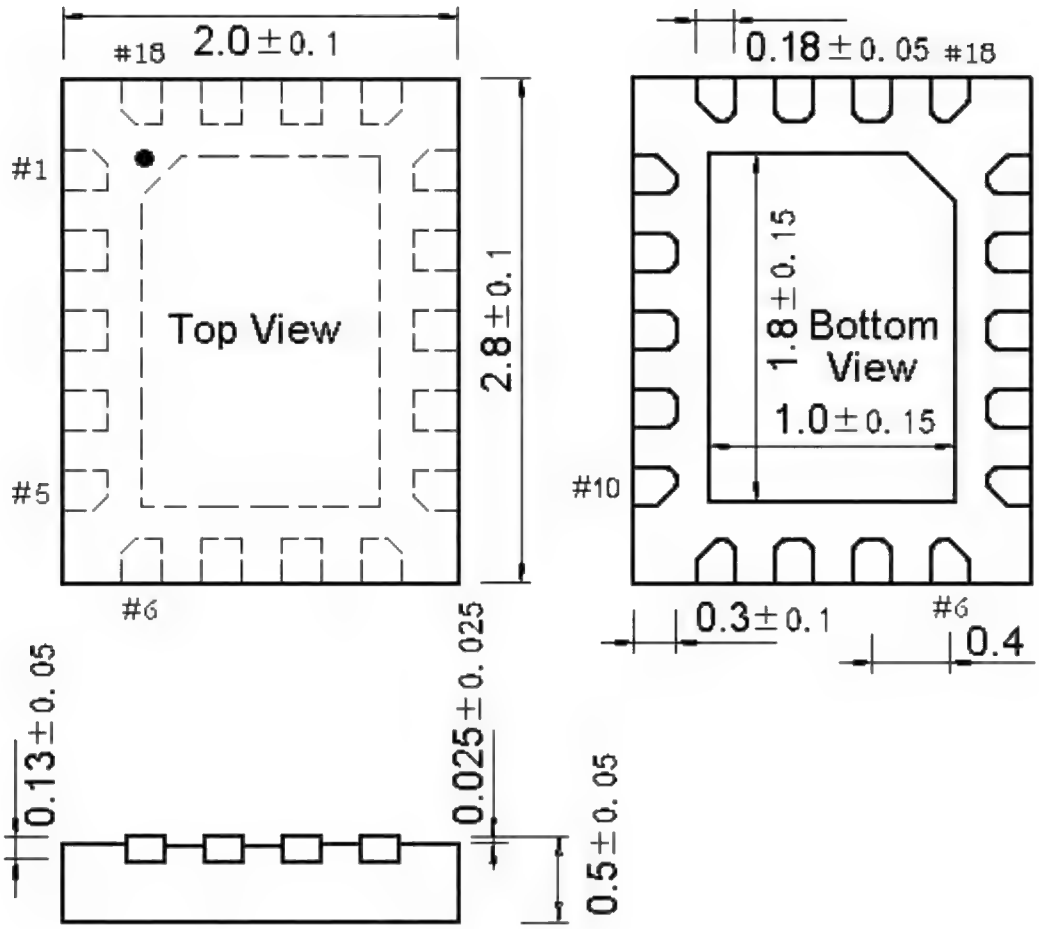

- **QFN20 (QFN20-3*3)**

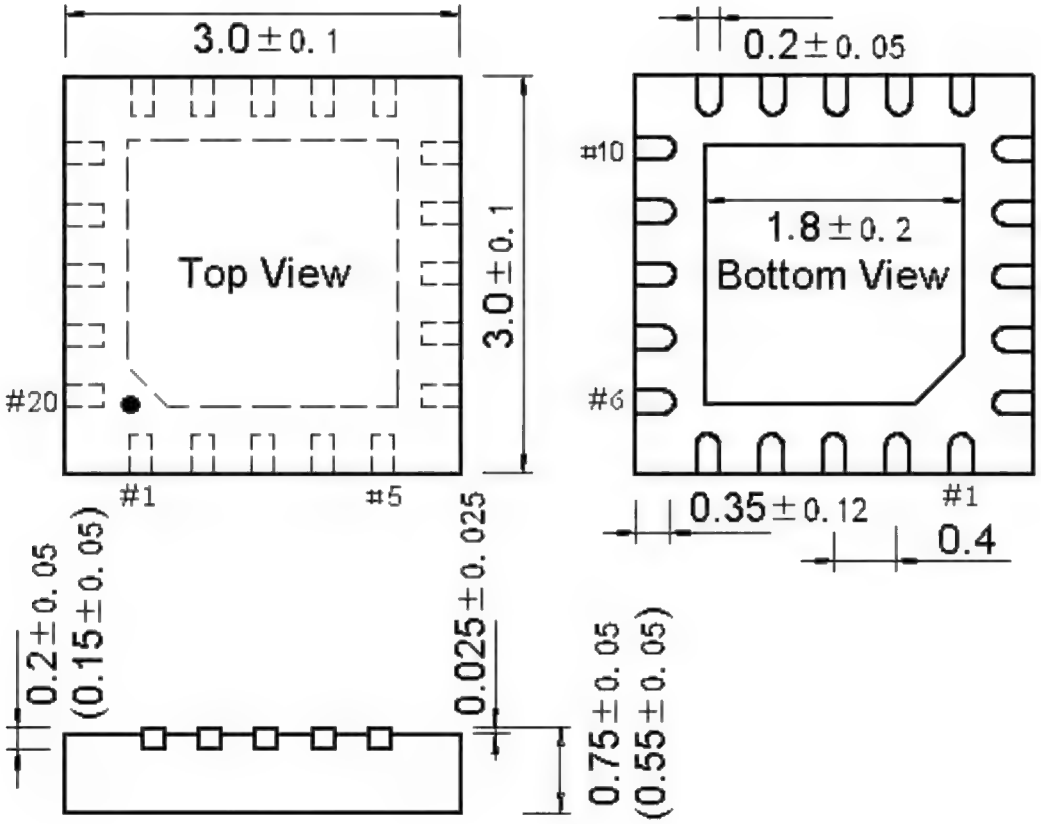

- **QFN20-3*3*0.55-0.4**

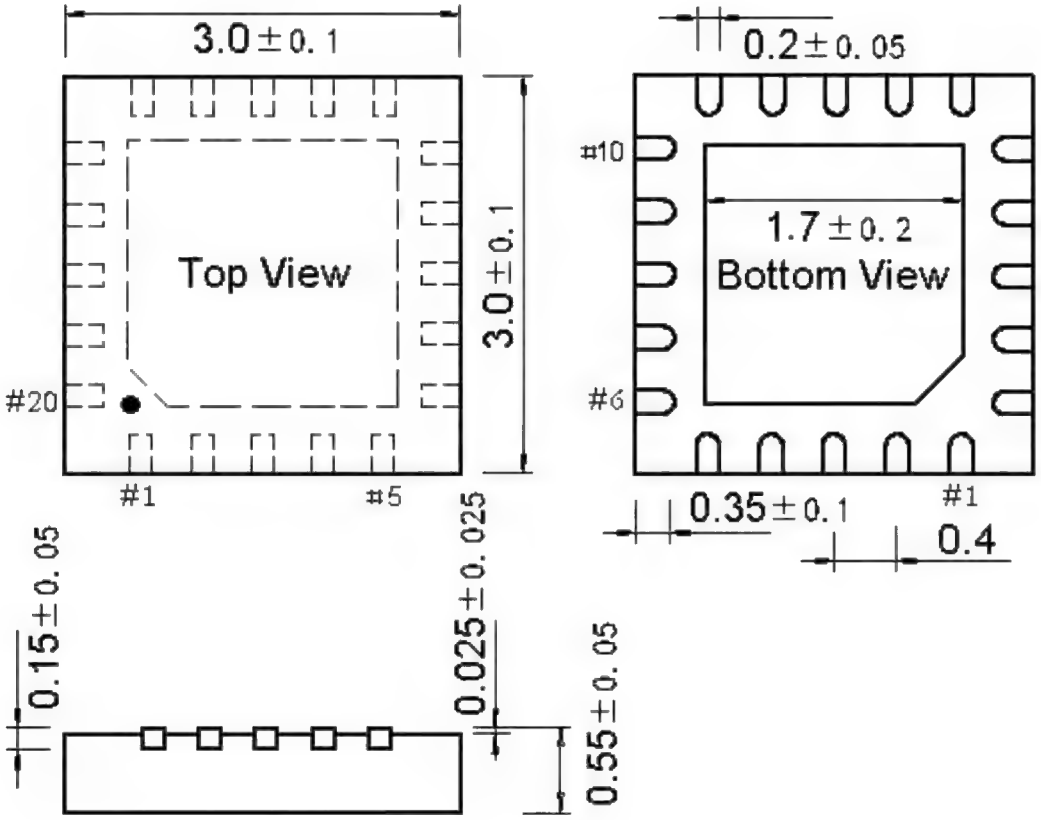

- **QFN20X4 (QFN20-4*4)**

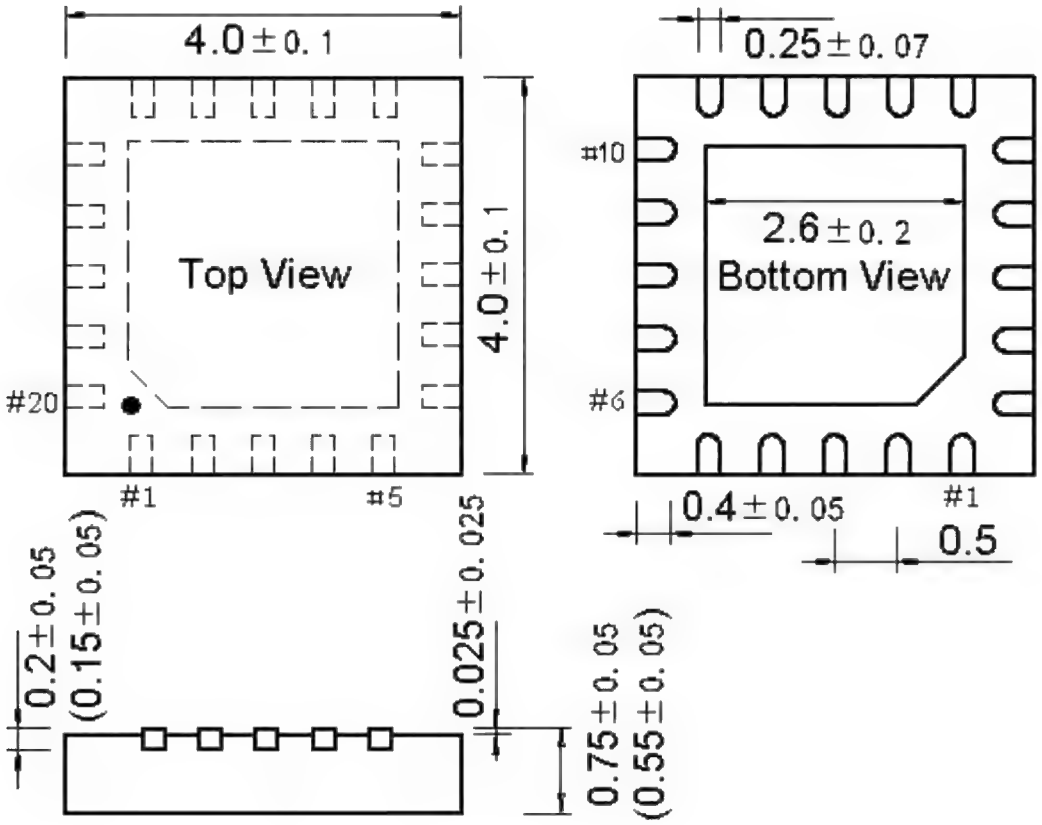

- **QFN20X25X45 (QFN20-2.5*4.5*0.75-0.5)**

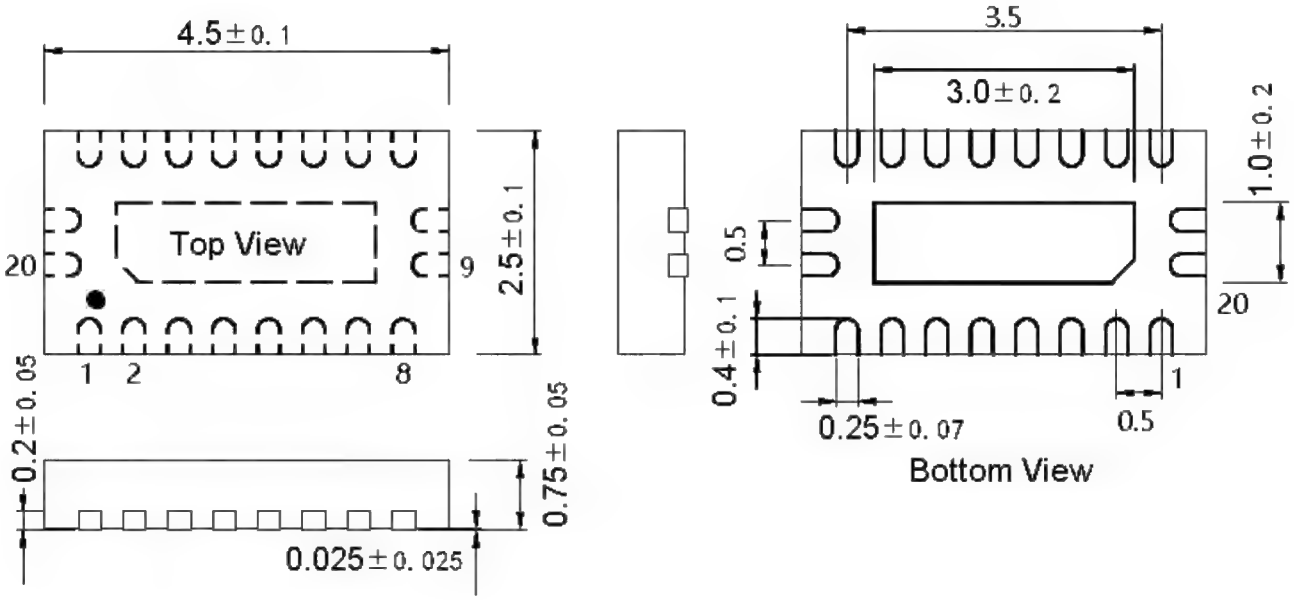

- **QFN20C2 (QFN20C-2*2*0.55-0.32)**

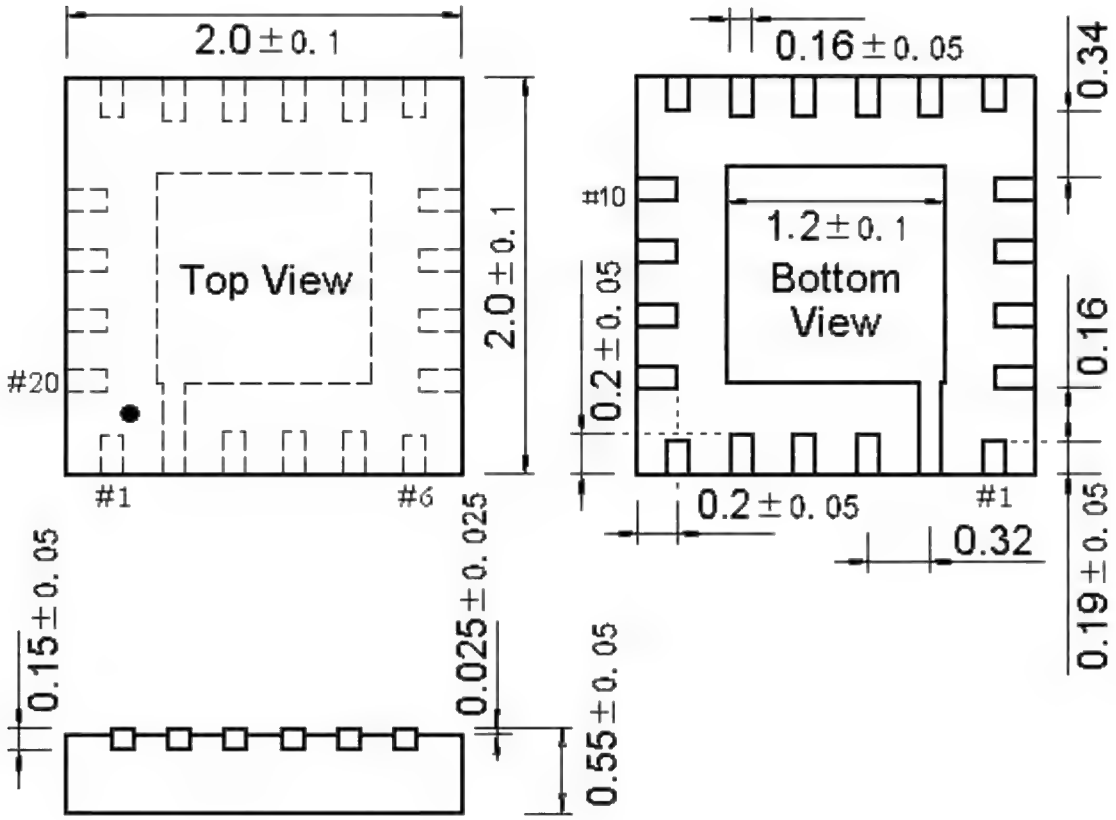

- **QFN24 (QFN24-4*4)**

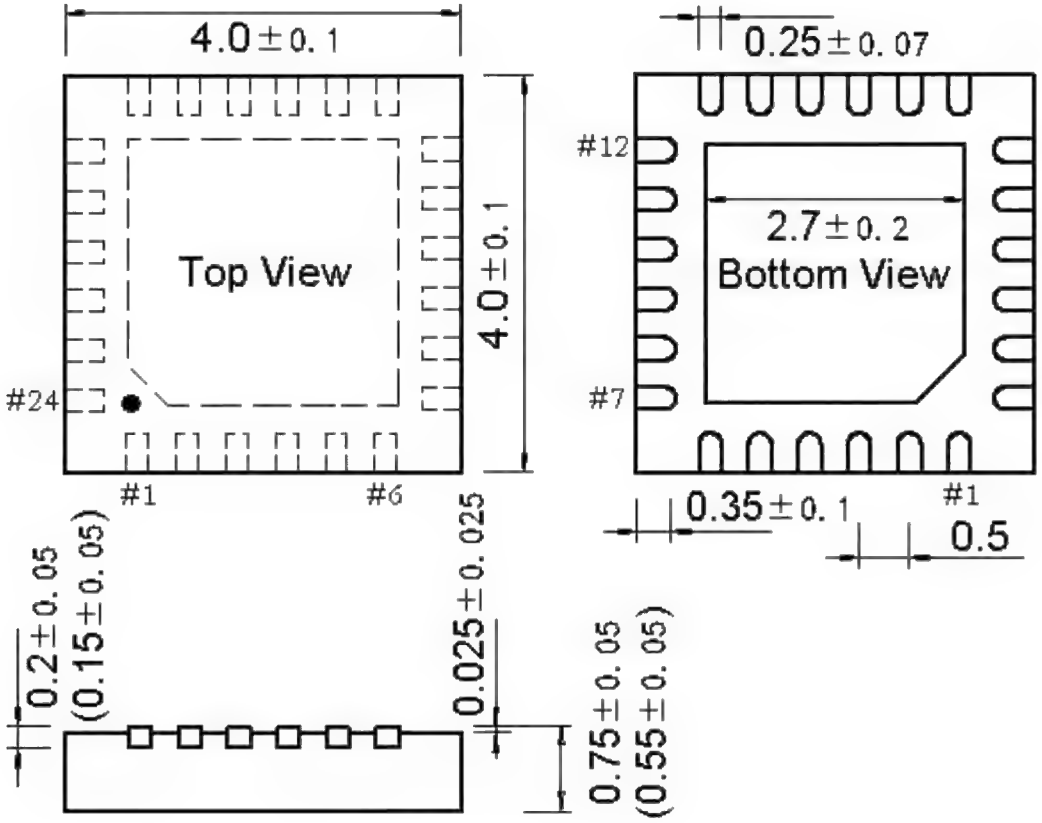

. **QFN24X3 (QFN24-3*3*0.55-0.4)**

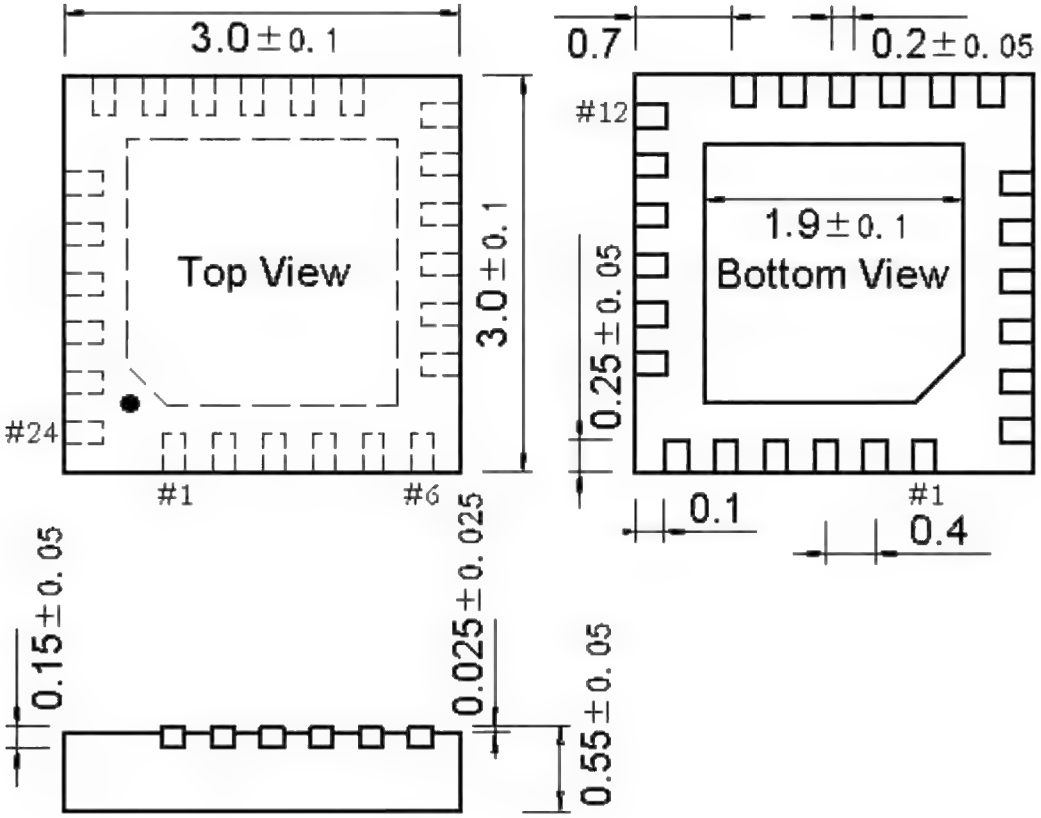

. **QFN26C3 (QFN26C-3*3*0.75-0.4)**

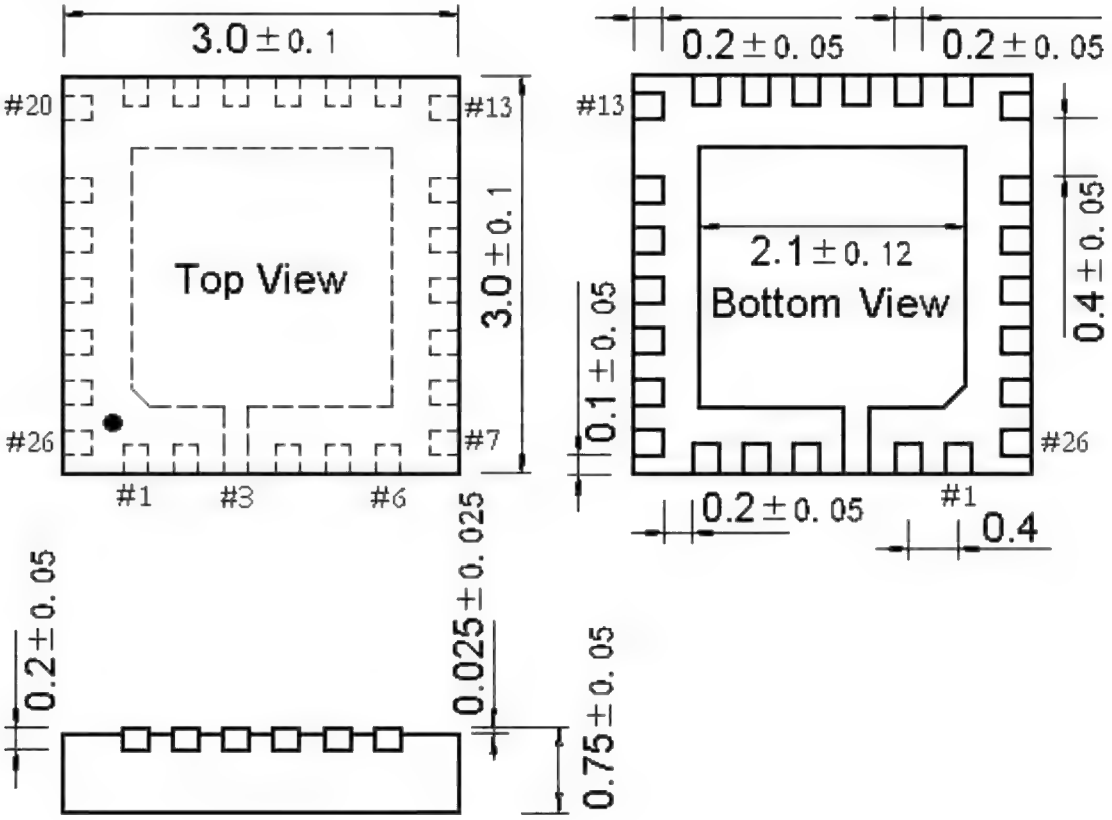

. **QFN28 (QFN28-4*4)**

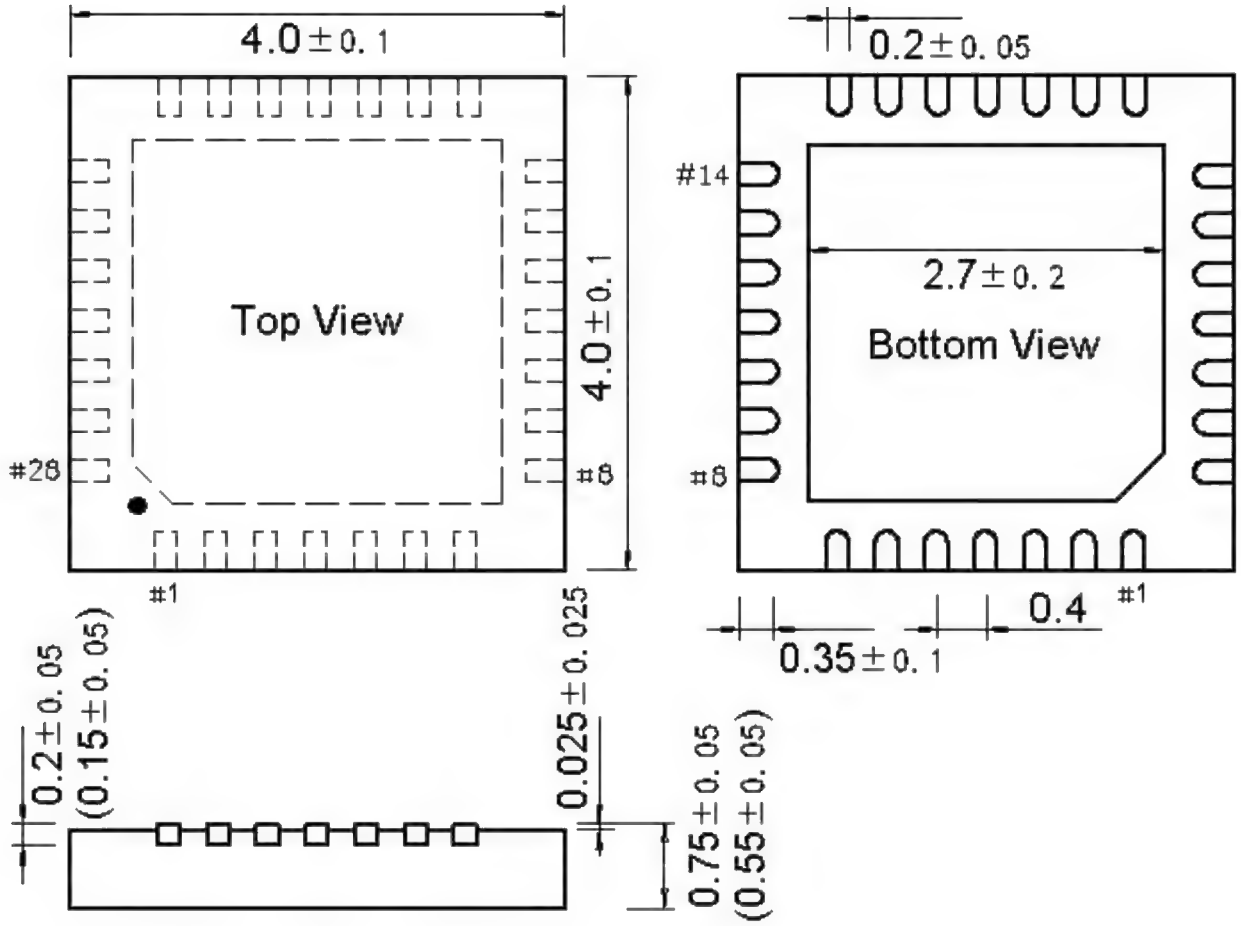

. **QFN28X5 (QFN28-5*5)**

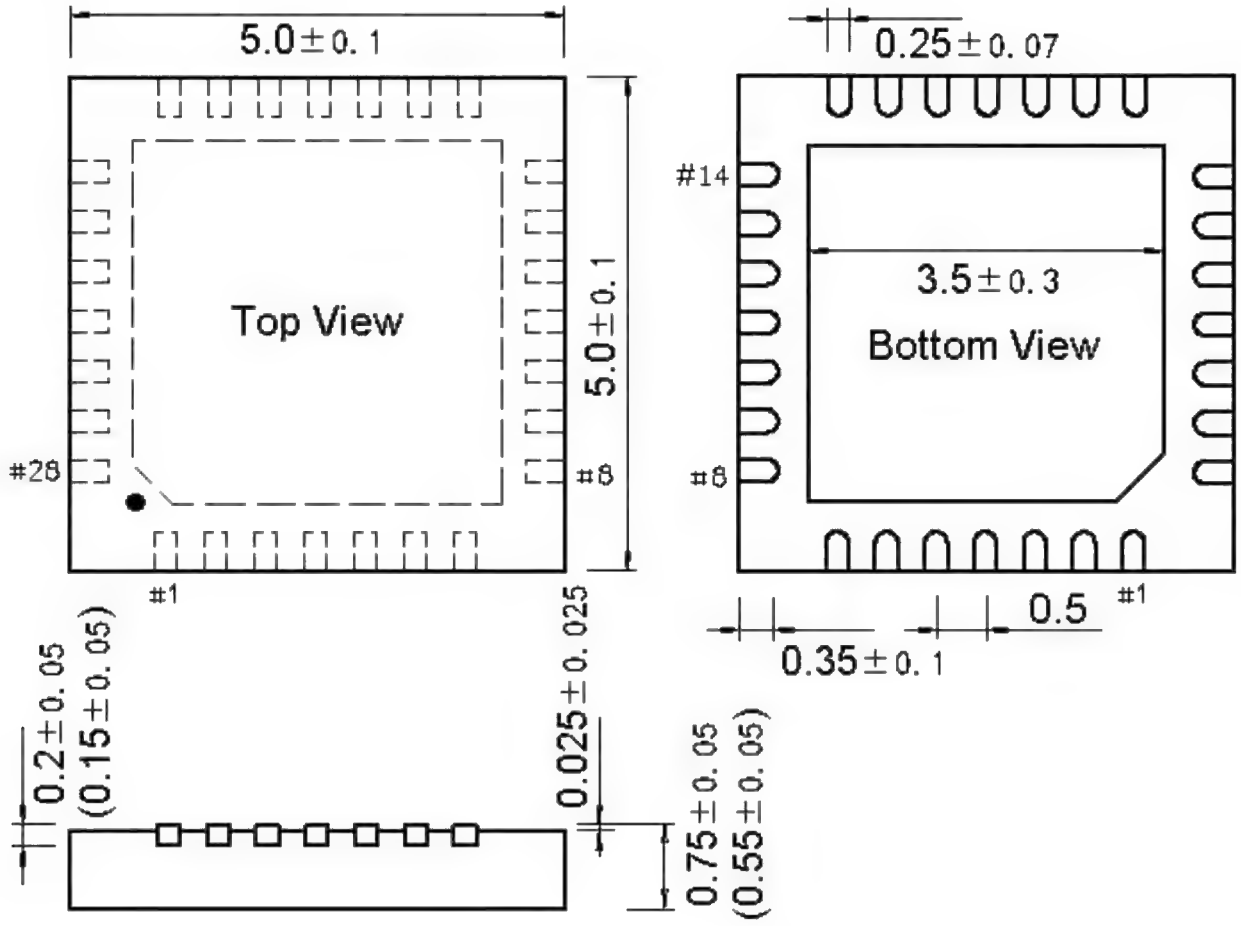

. **QFN32 (QFN32-4*4)**

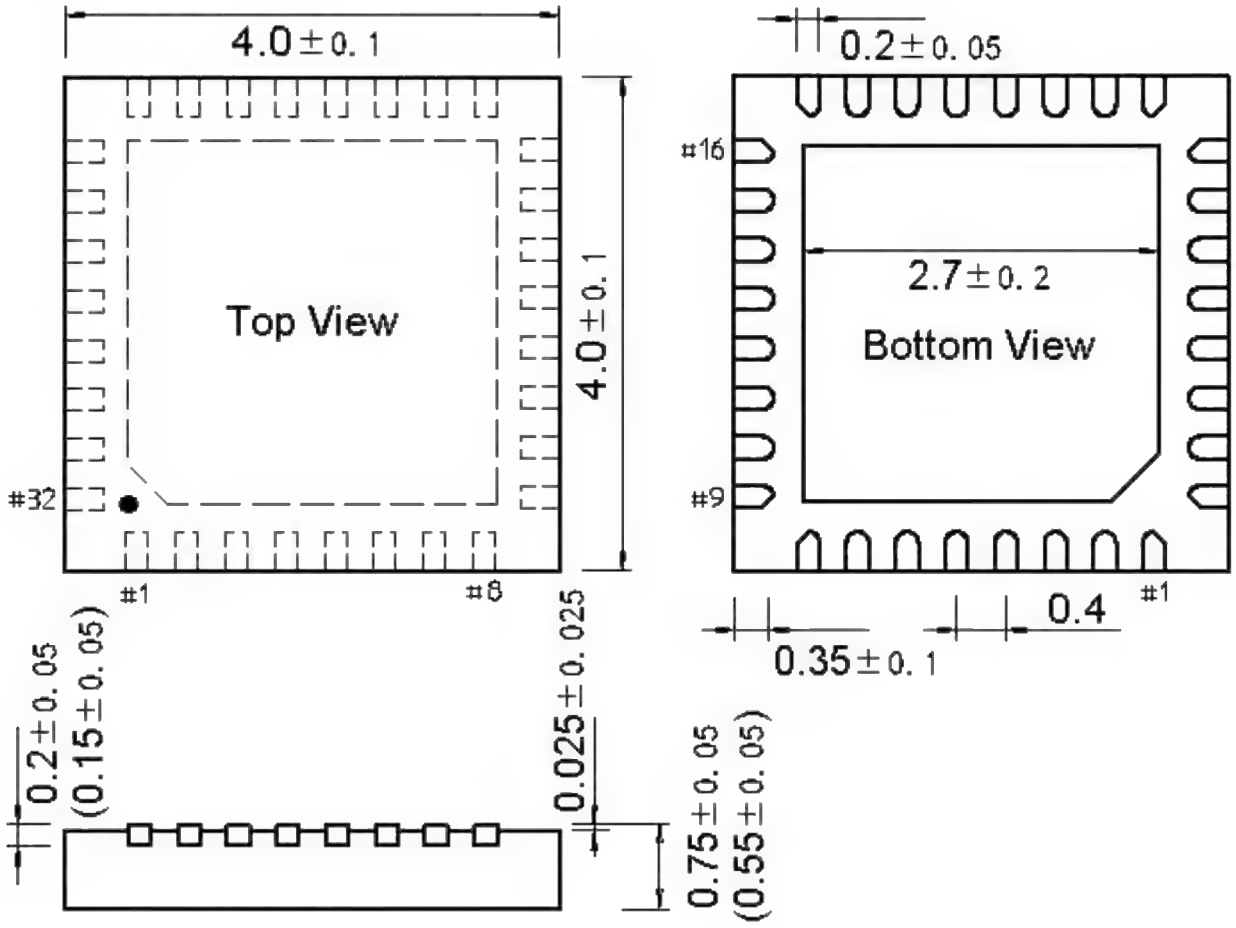

. **QFN32X5 (QFN32-5*5)**

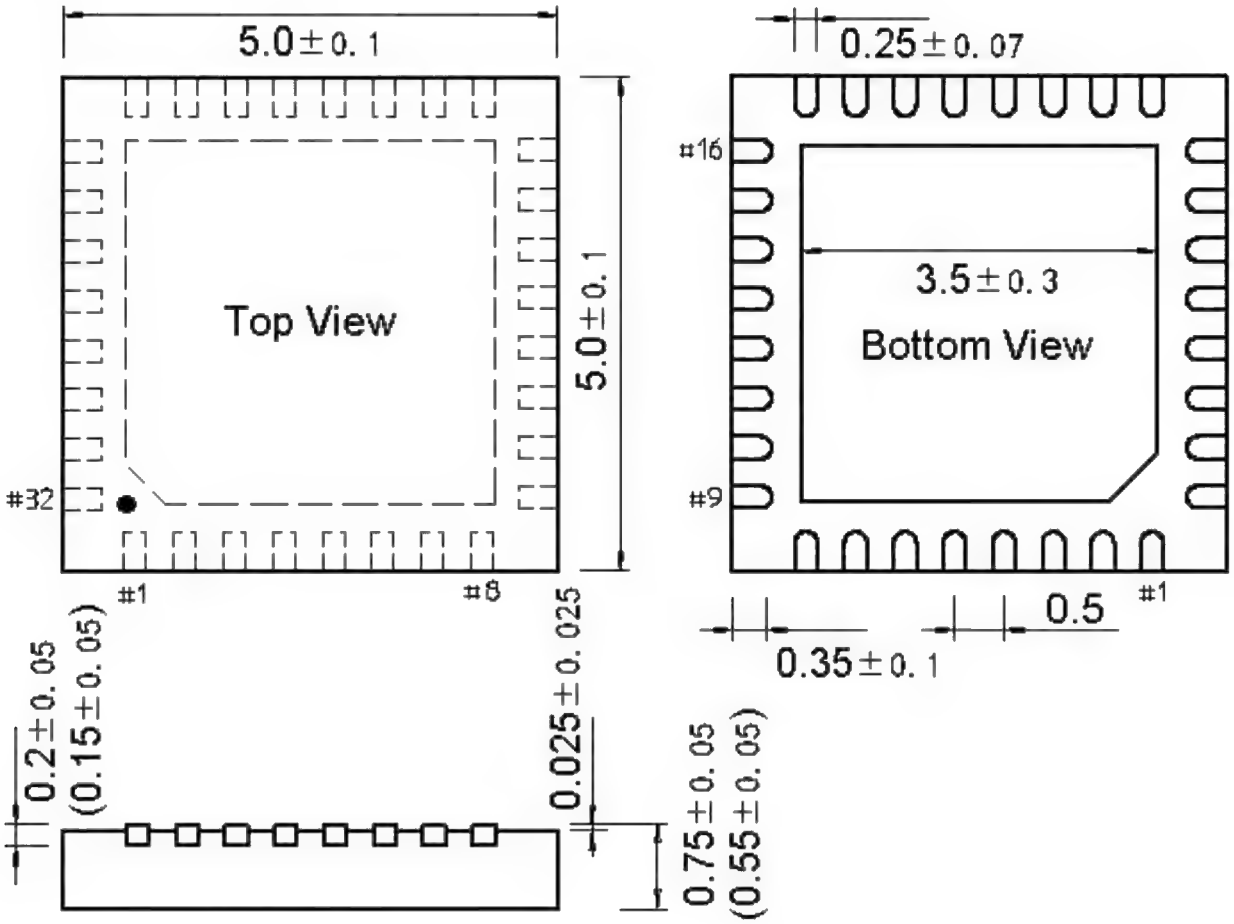

. **QFN32C28X45 (QFN32C-2.8*4.5*0.75-0.4)**

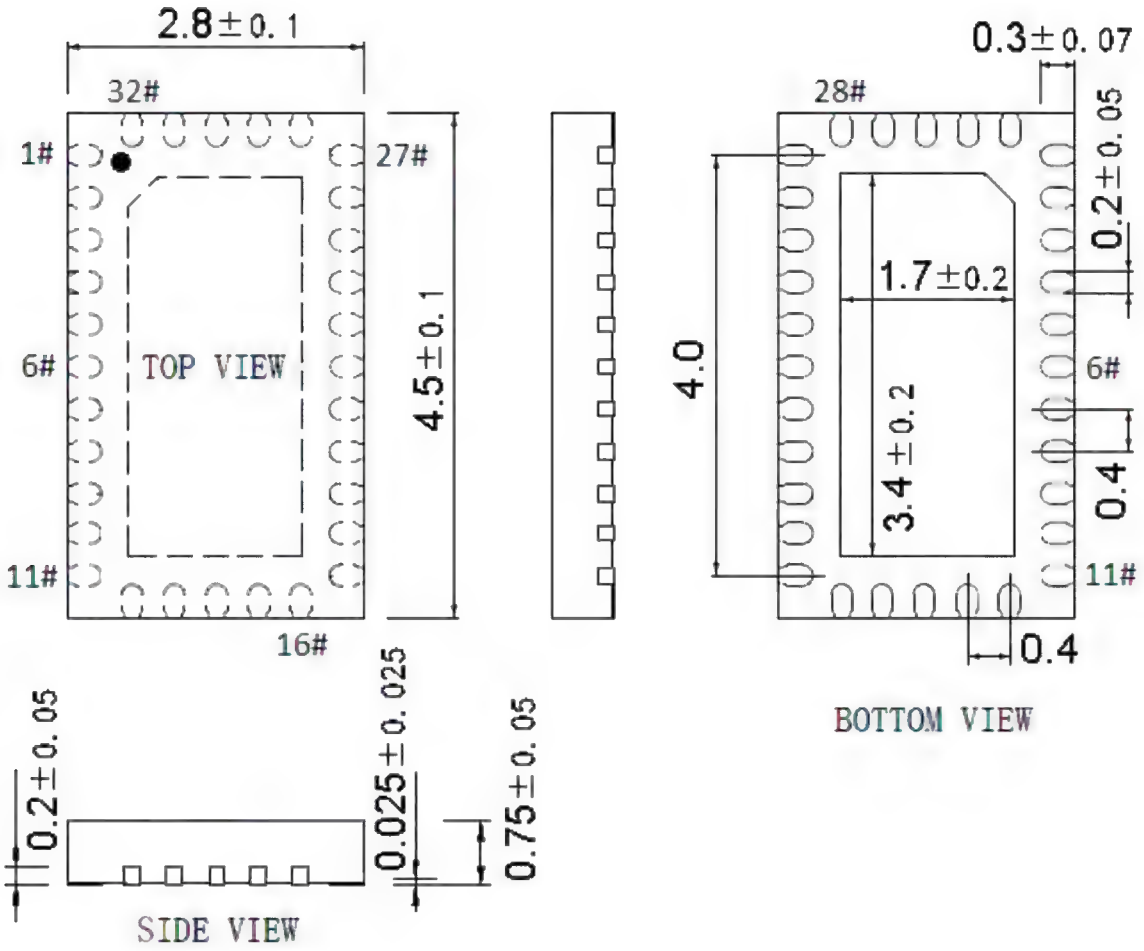

. **QFN36C4 (QFN36C-4*4*0.75-0.4)**

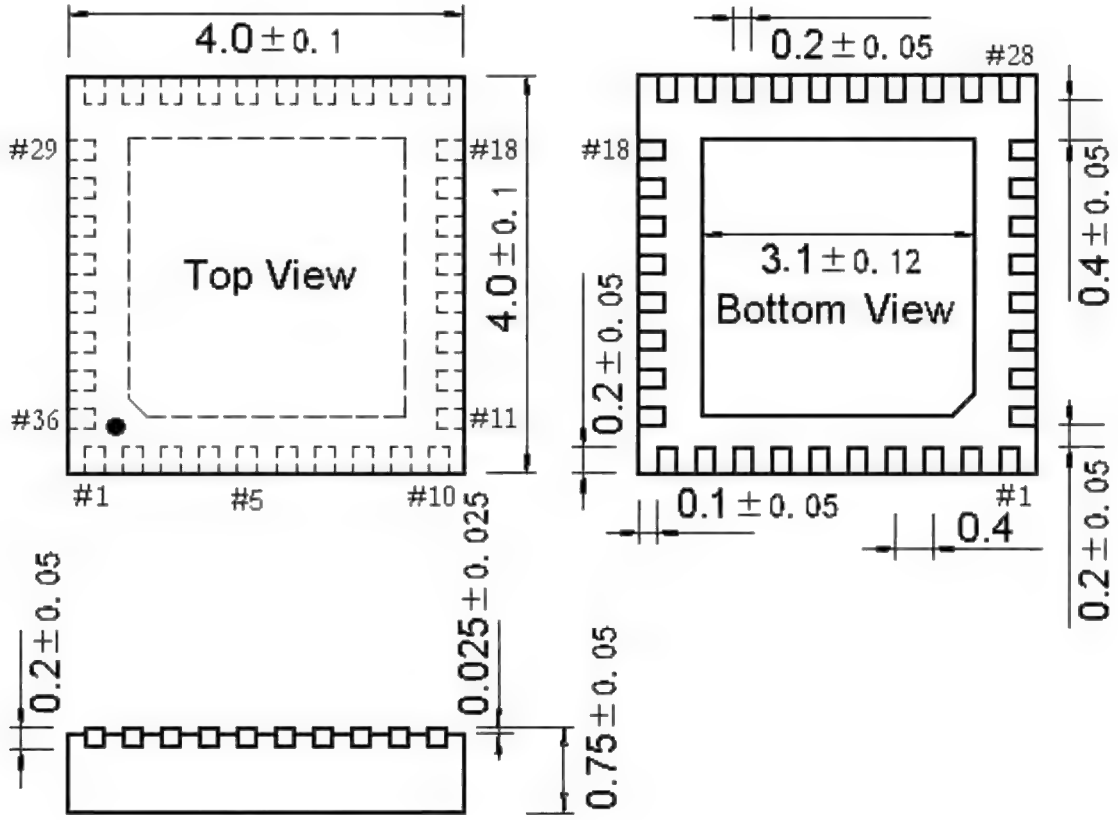

. **QFN36X6 (QFN36-6*6)**

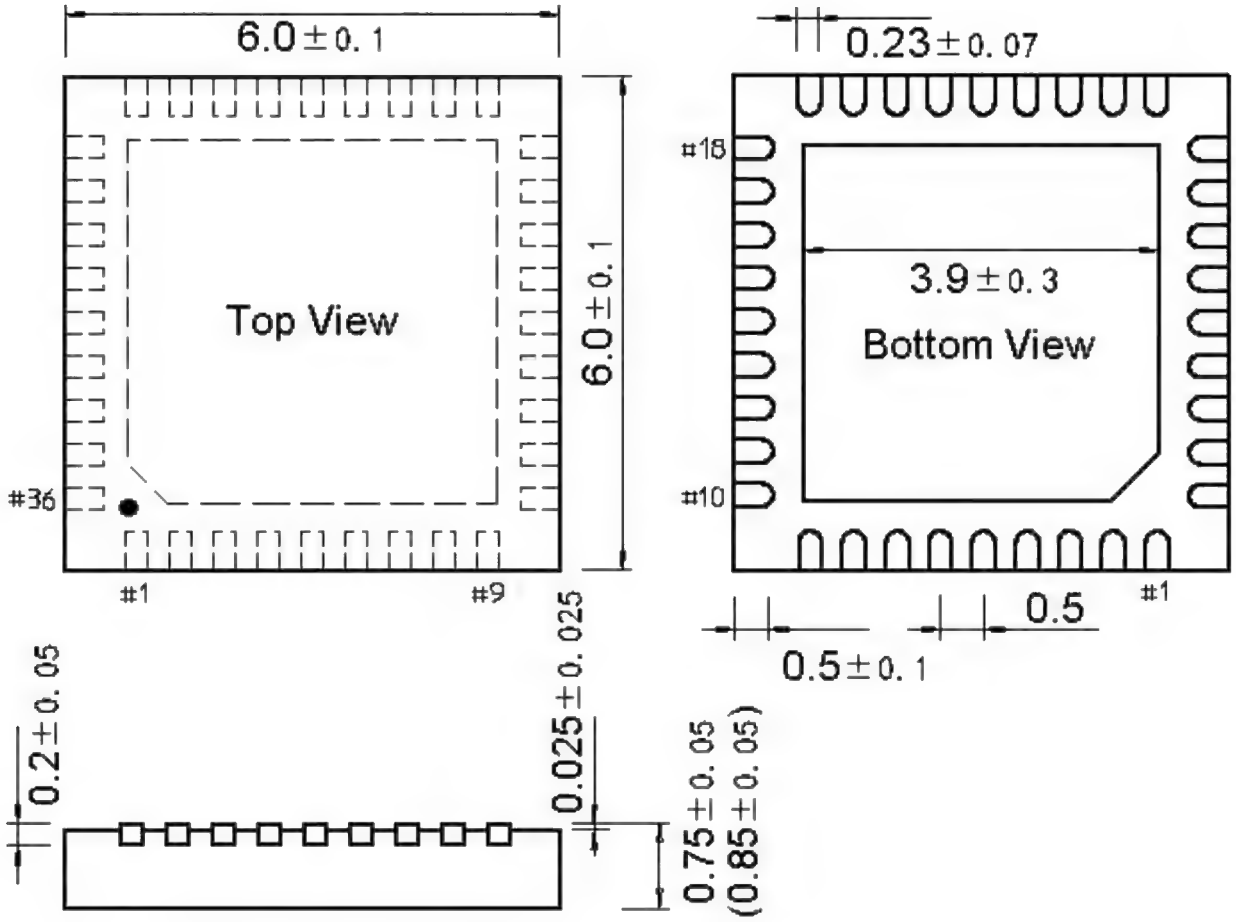

. **QFN40 (QFN40-5*5)**

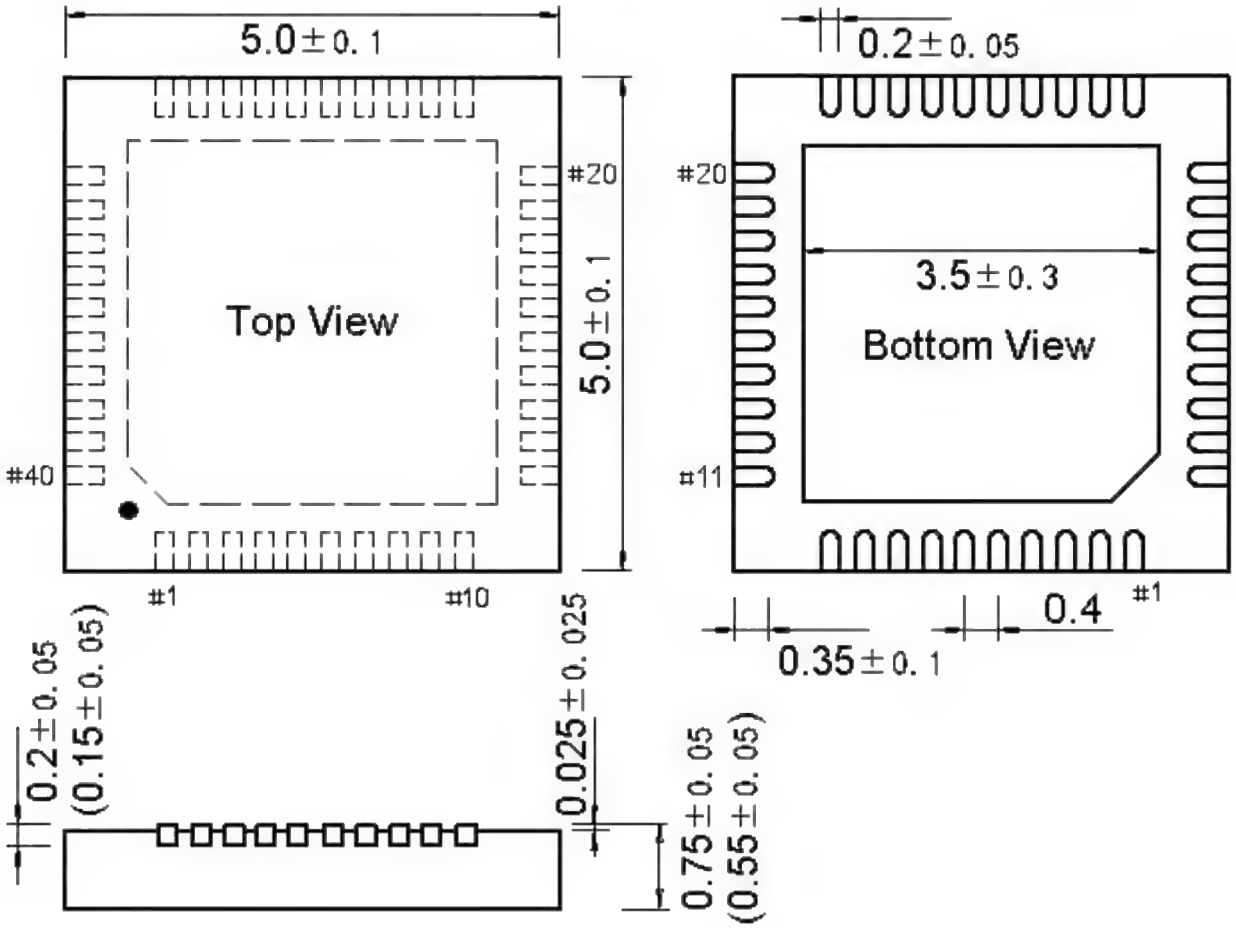

. **QFN40X6 (QFN40-6*6)**

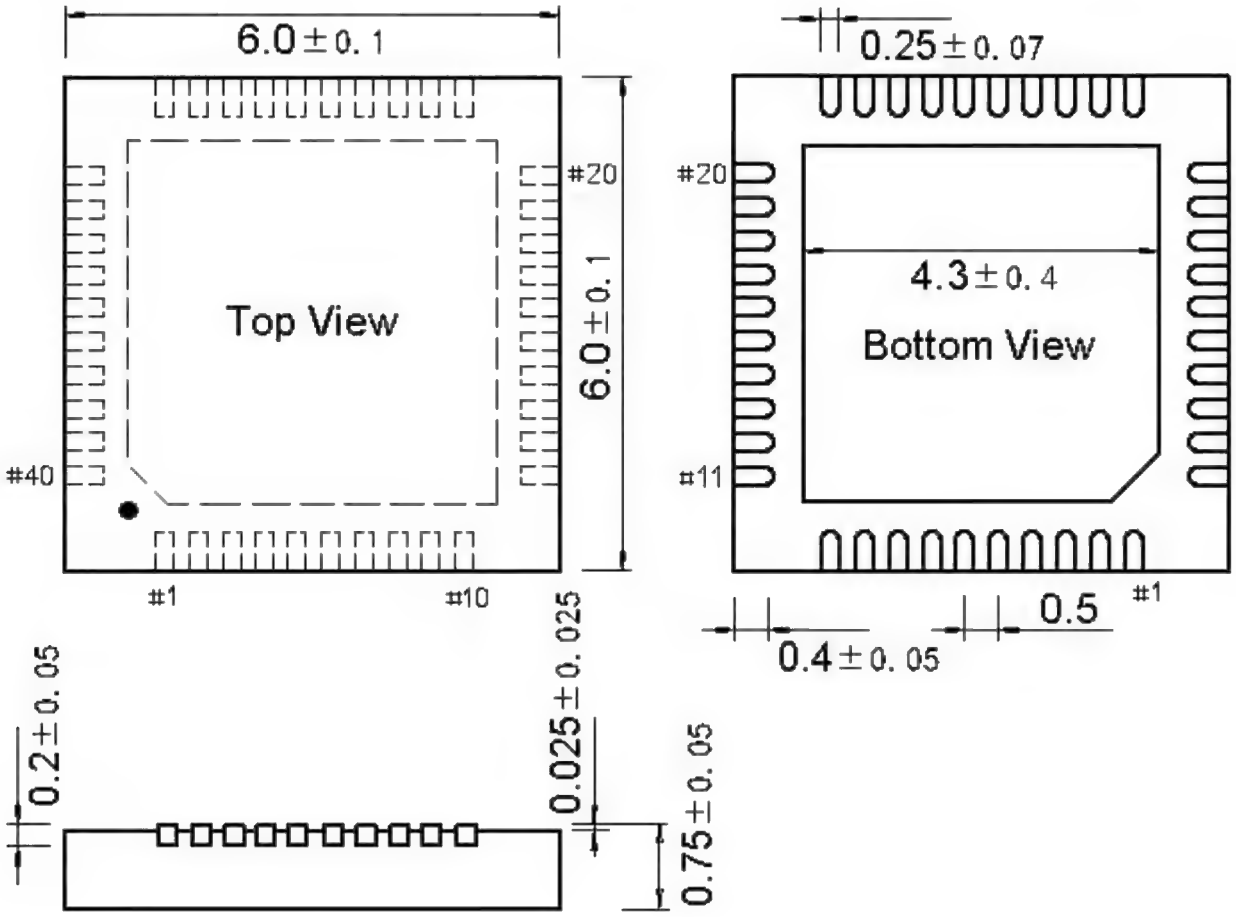

. **QFN42X35X9 (QFN42-3.5*9*0.75-0.5)**

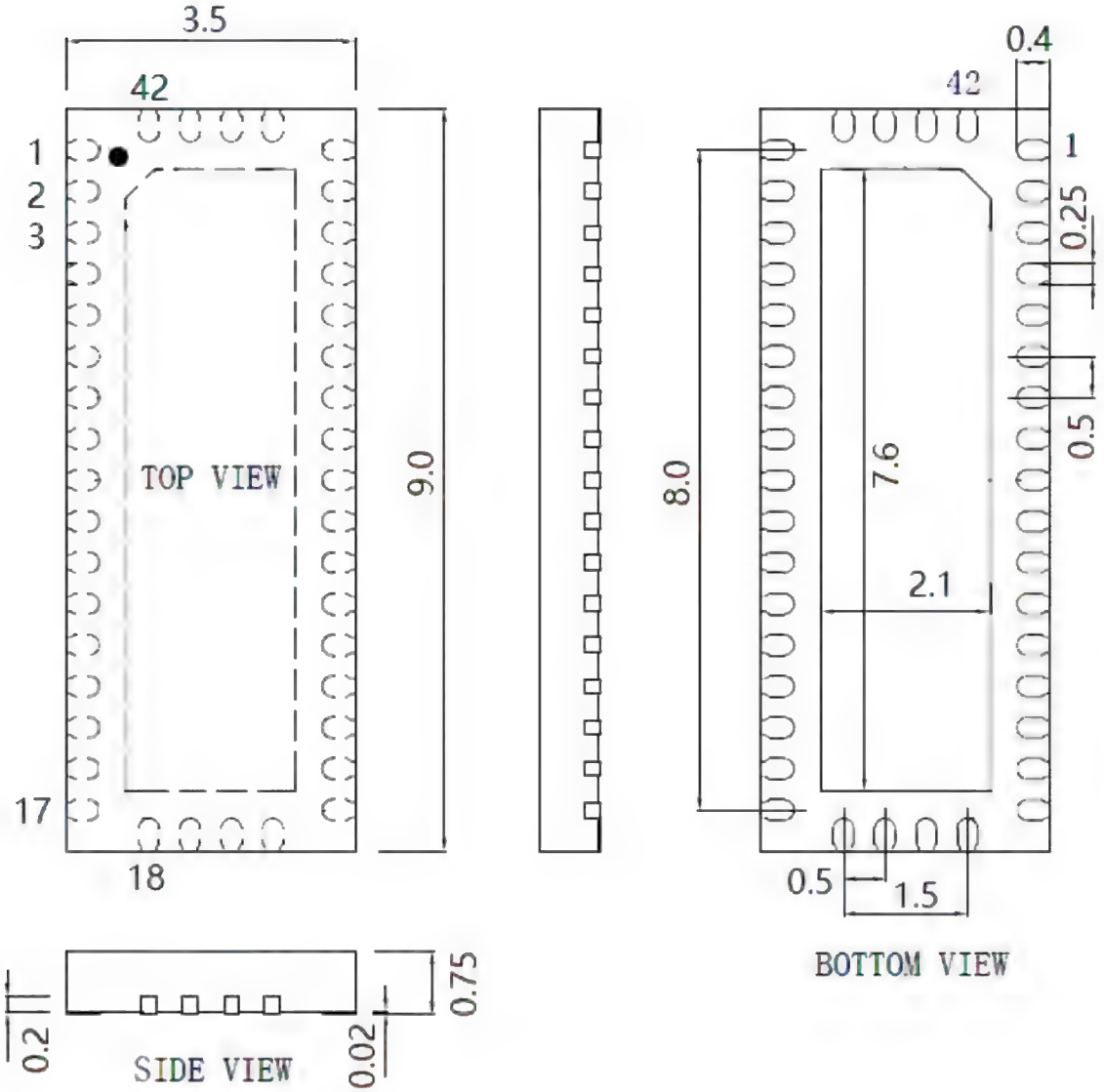

. **QFN42C35X9 (QFN42C-3.5*9*0.75-0.5)**

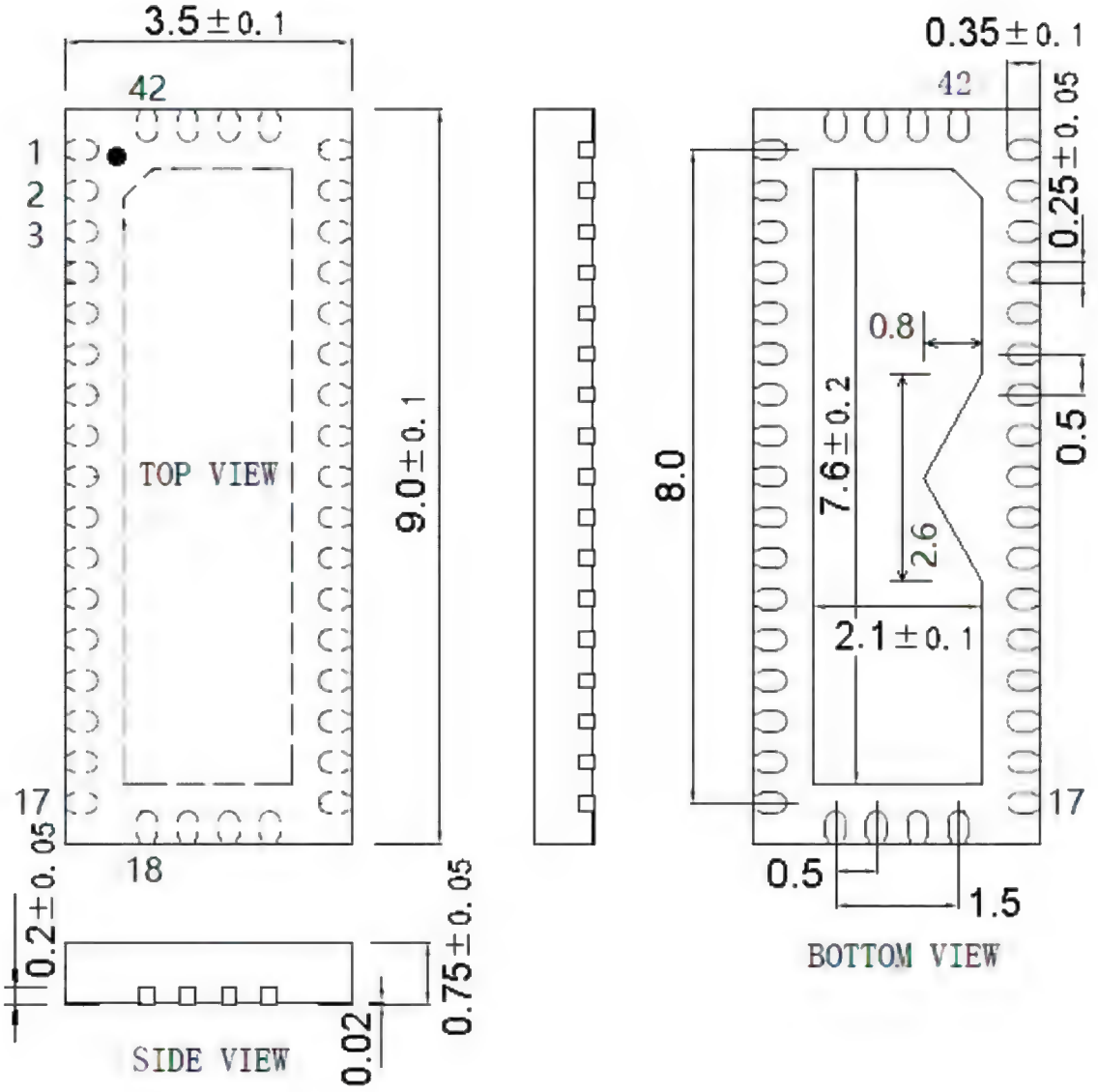

. **QFN46C5 (QFN46C-5*5*0.75-0.4)**

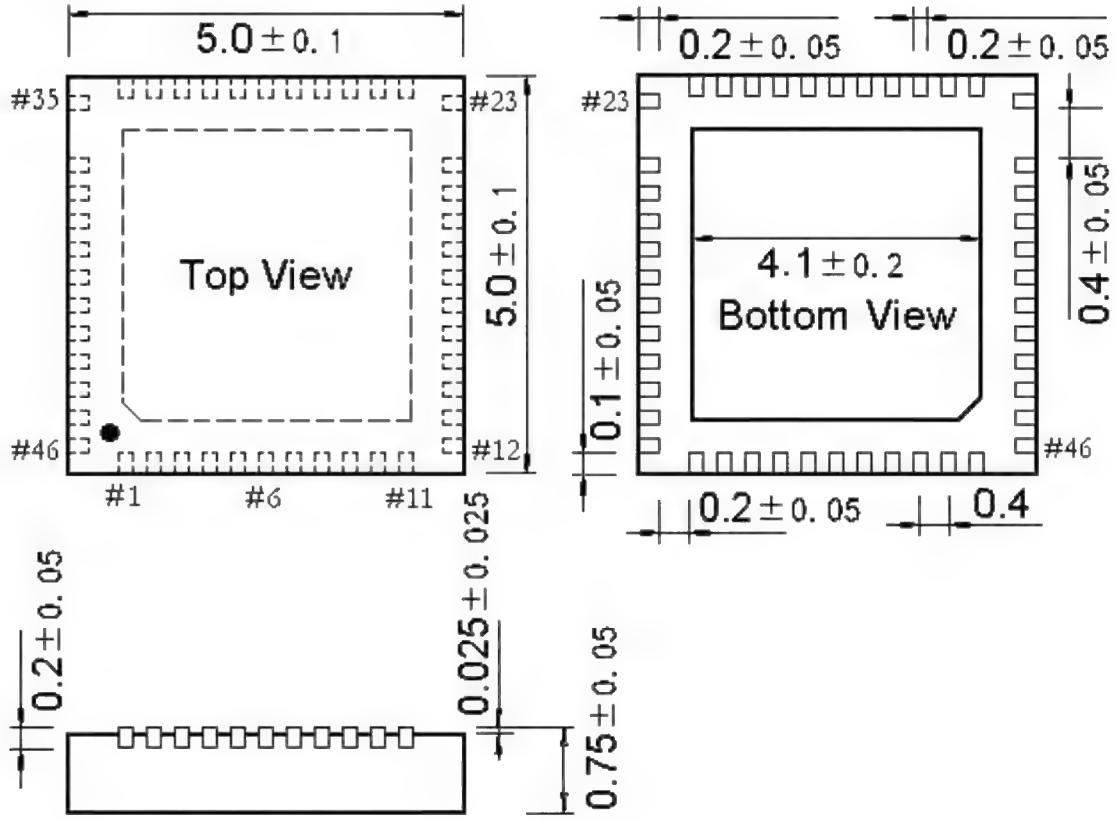

. **QFN48 (QFN48-5*5*0.75-0.35)**

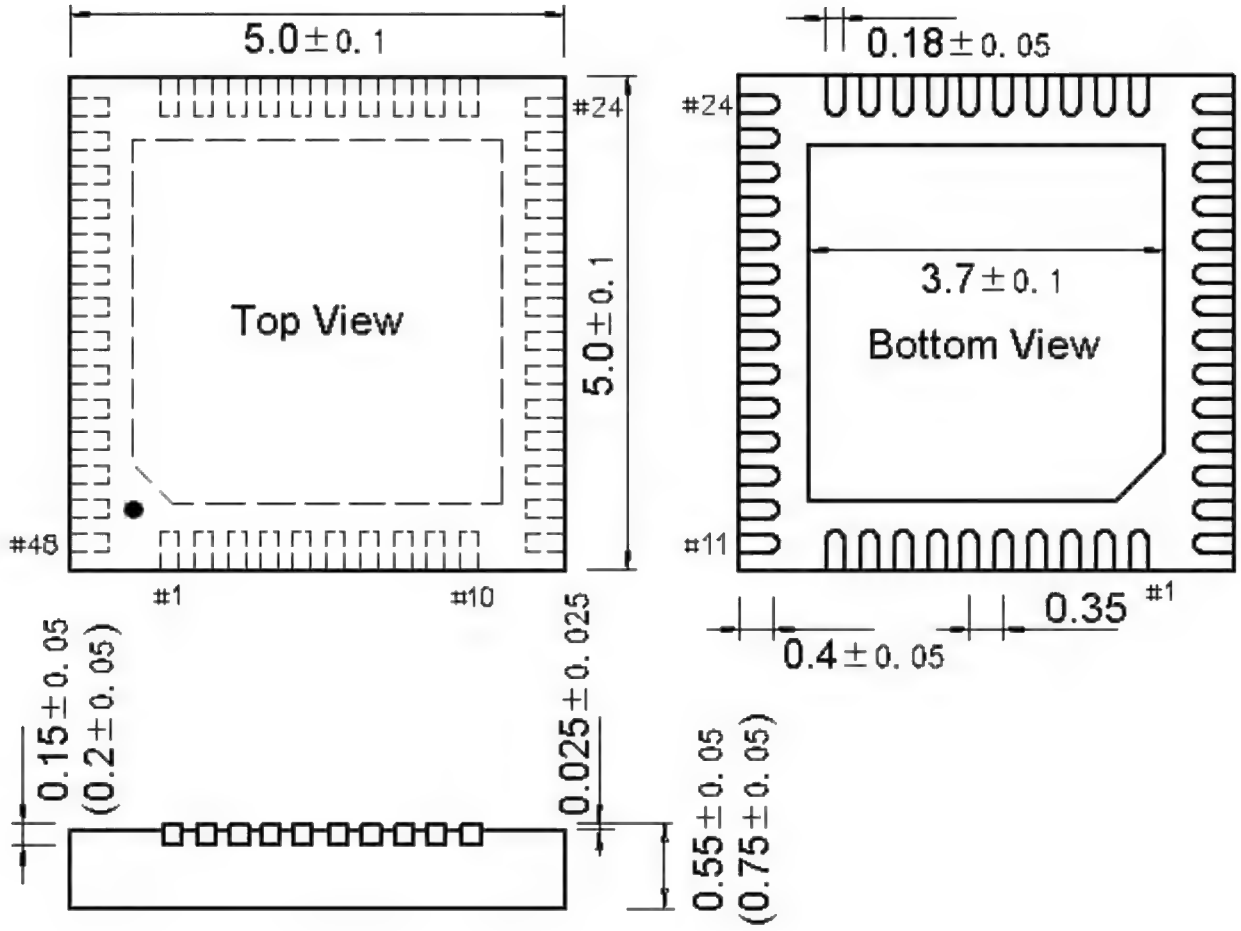

. **QFN48-5*5*0.55-0.35**

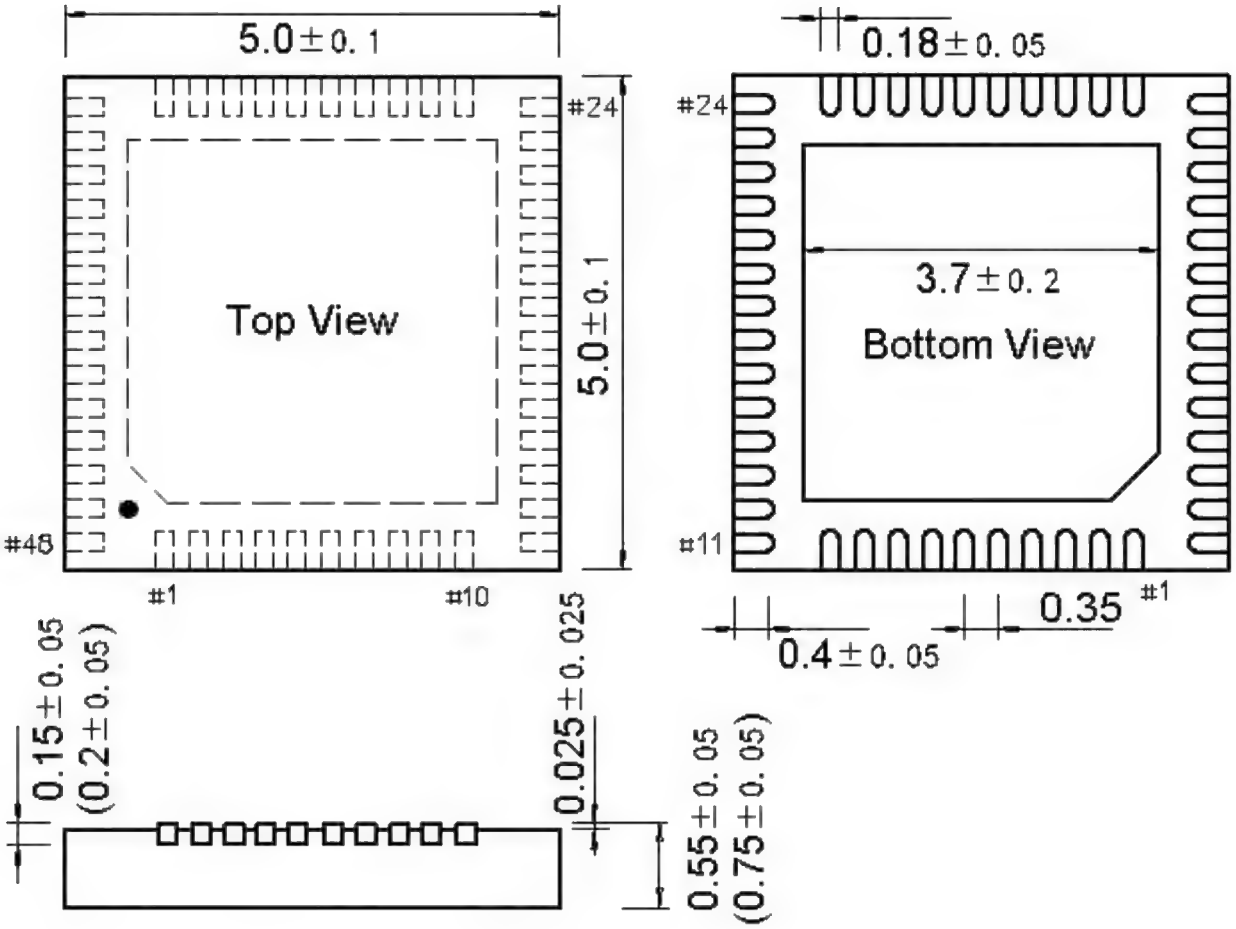

. **QFN48X6 (QFN48-6*6)**

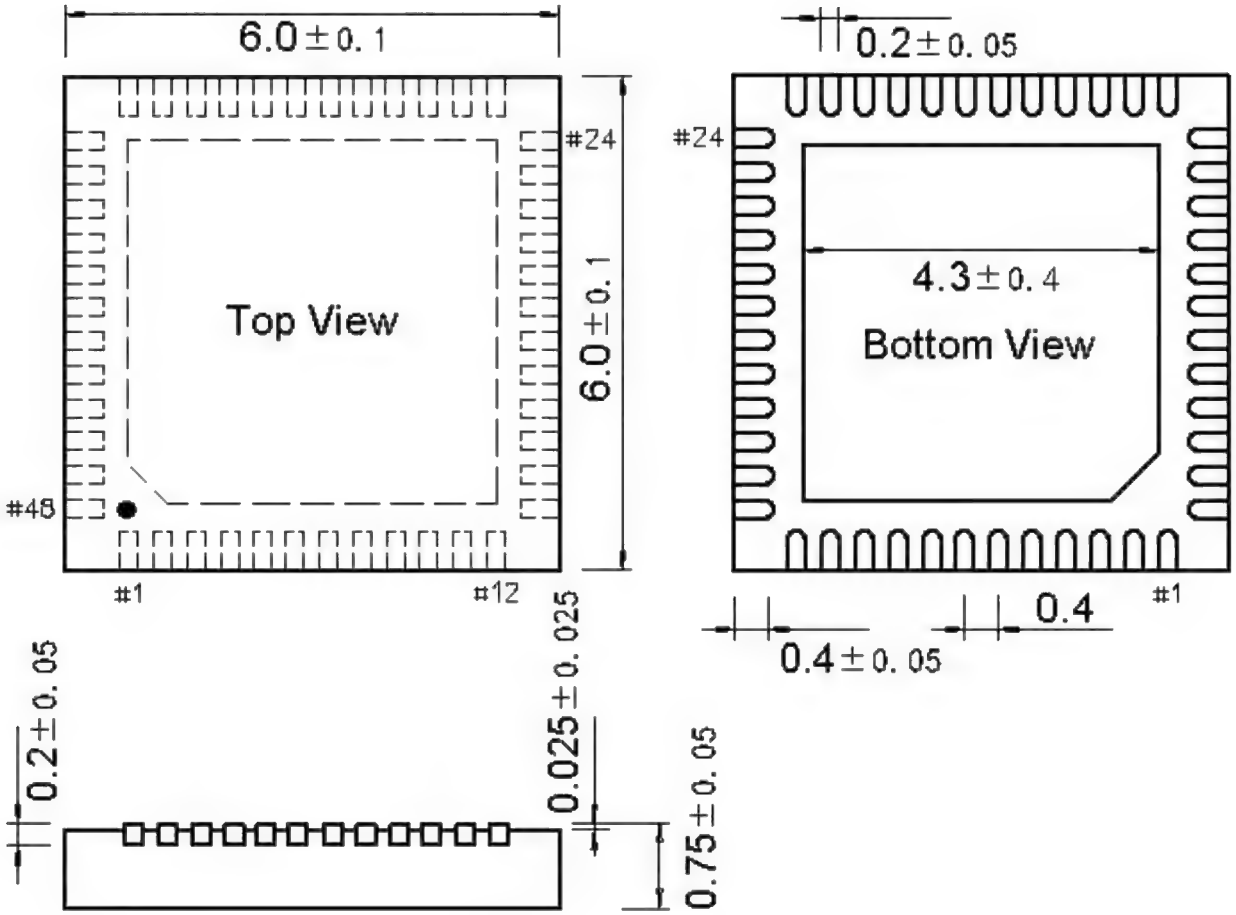

QFN48X7 (QFN48-7*7)

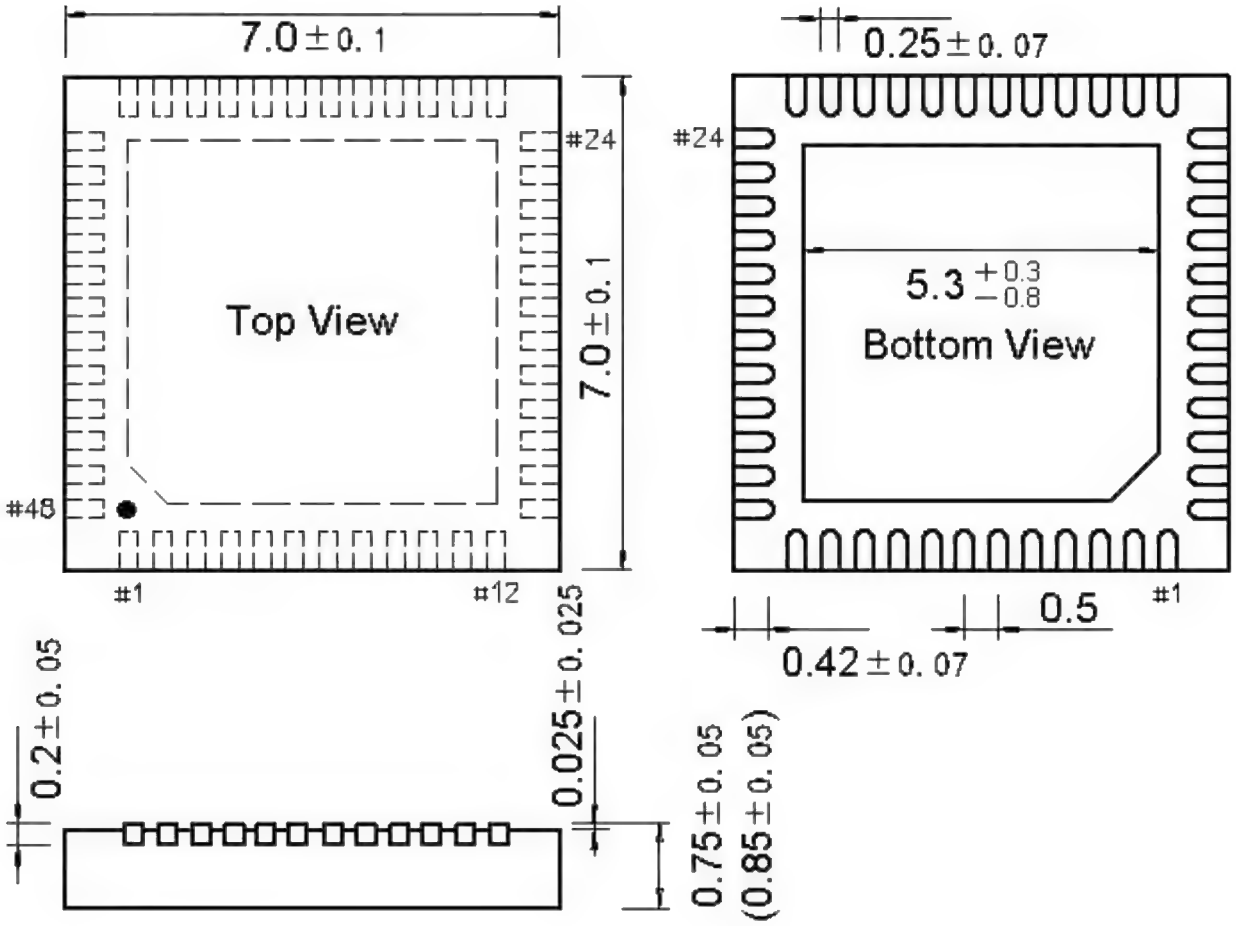

. **QFN52X35X9 (QFN52-3.5*9*0.75-0.4)**

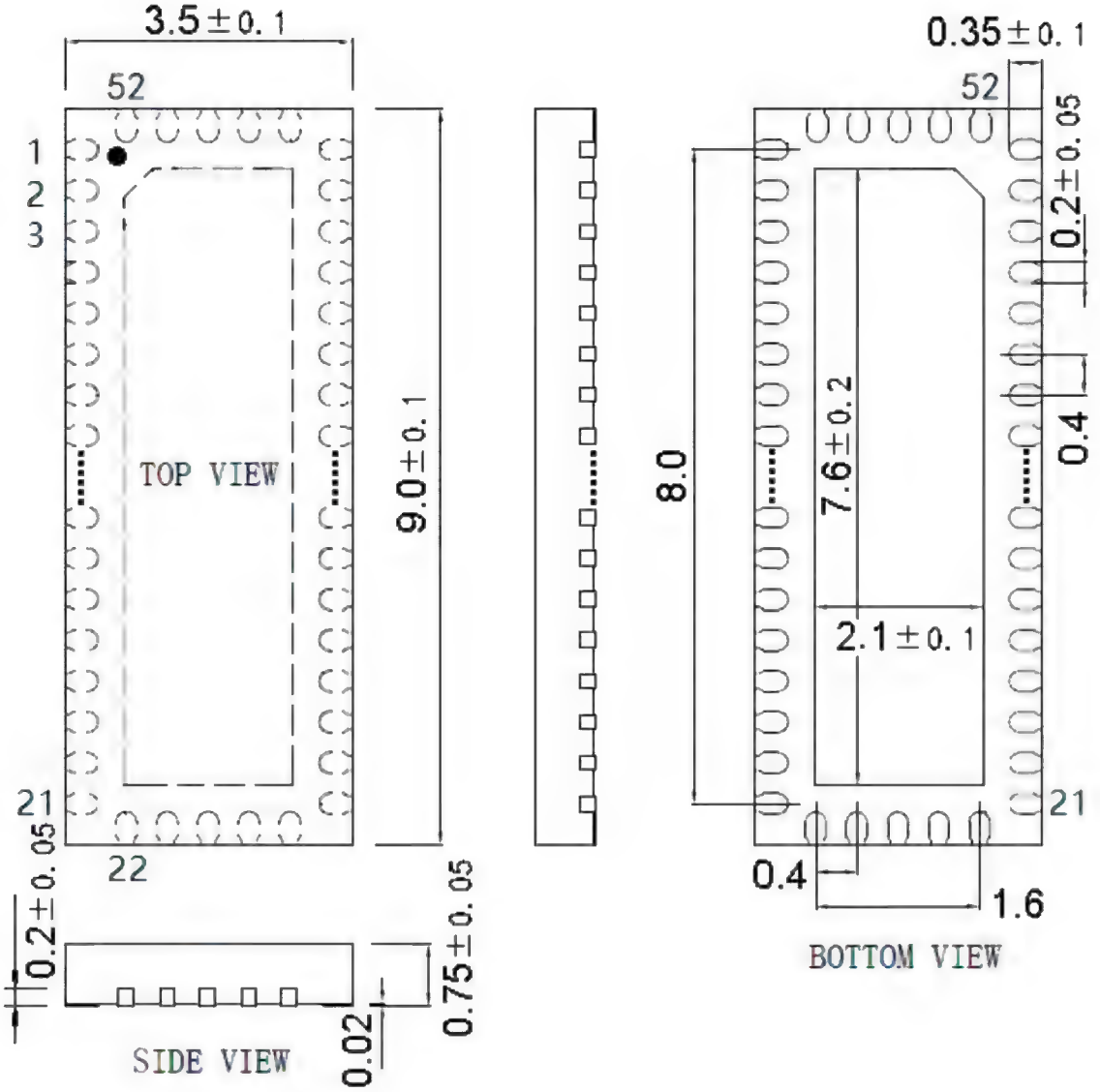

. **QFN56 (QFN56-7*7)**

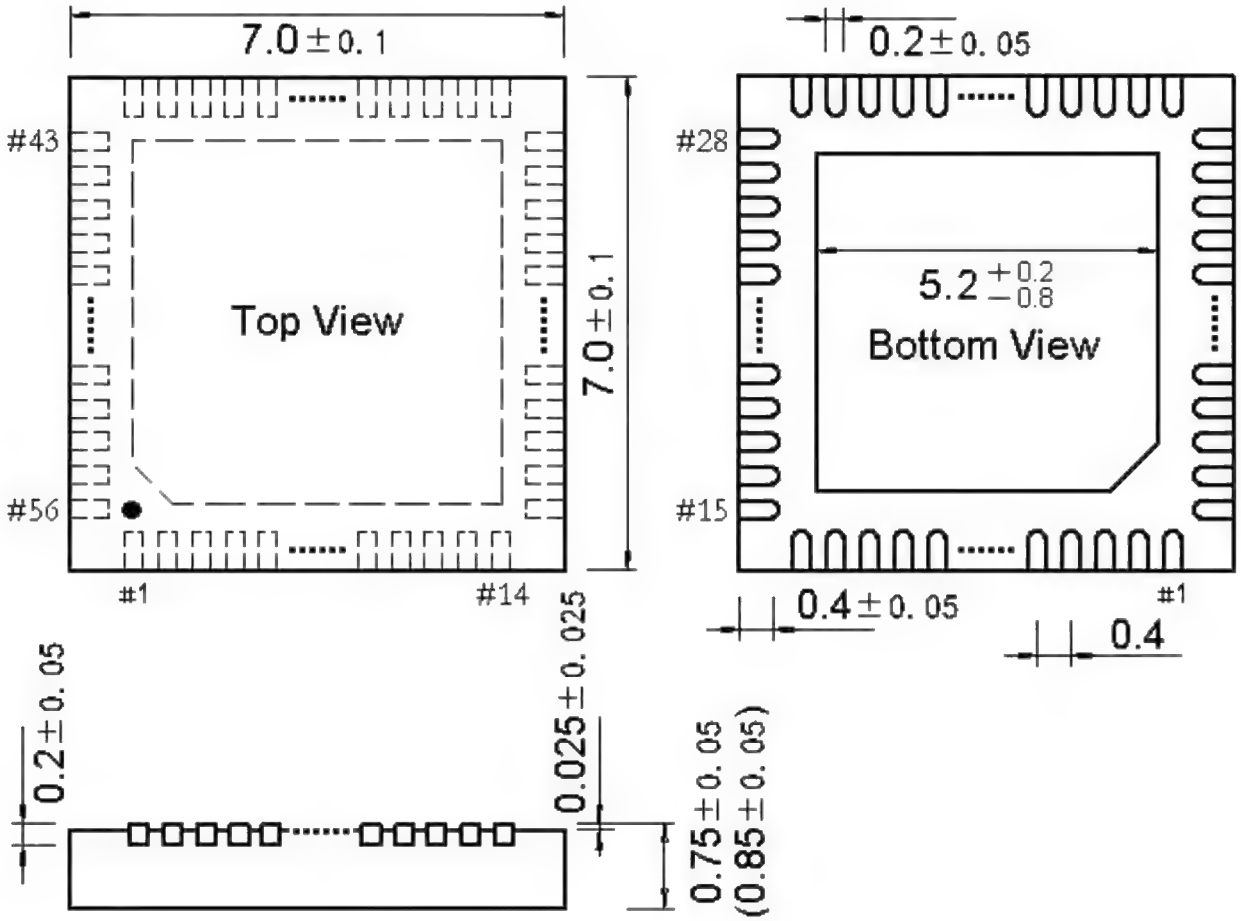

. **QFN56X8 (QFN56-8*8)**

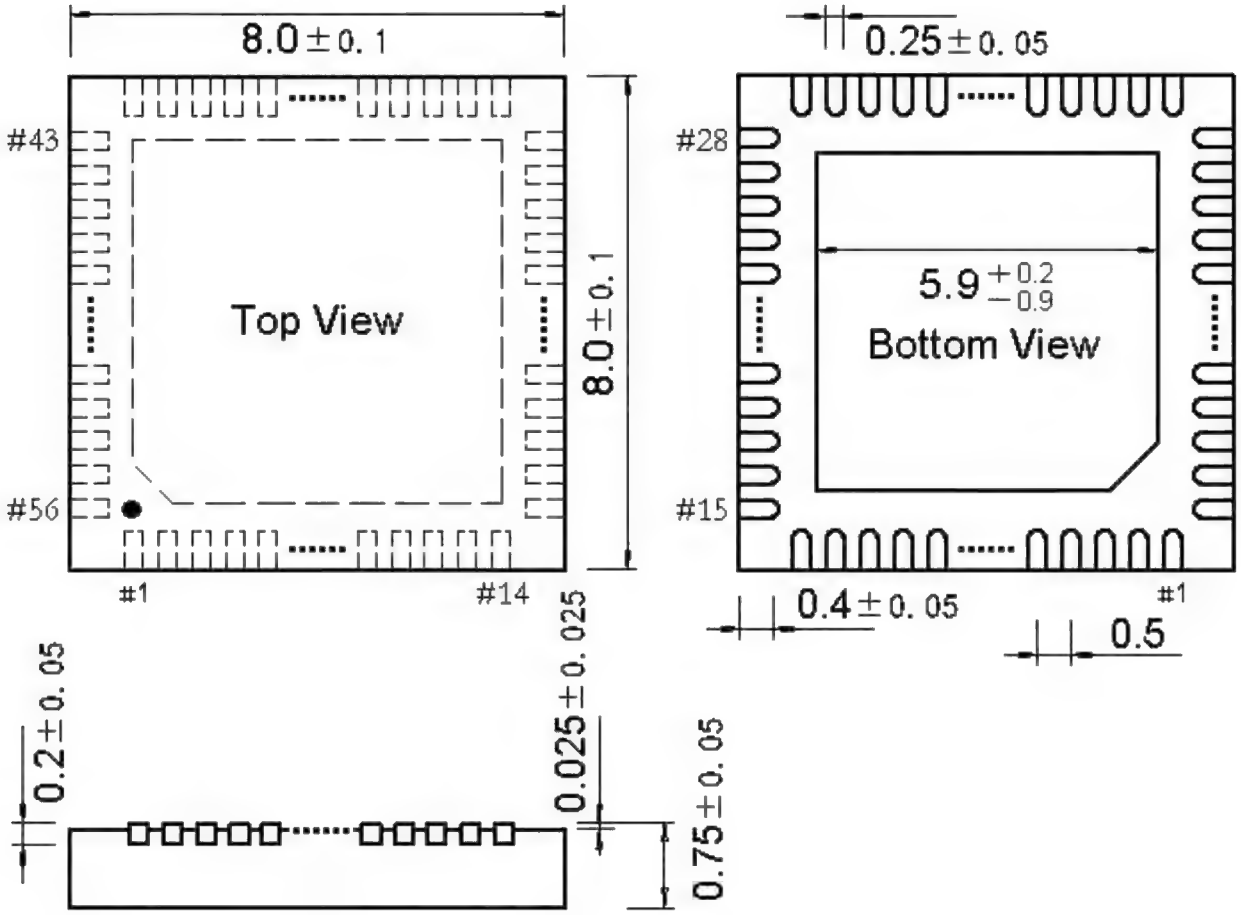

. **QFN64 (QFN64-8*8)**

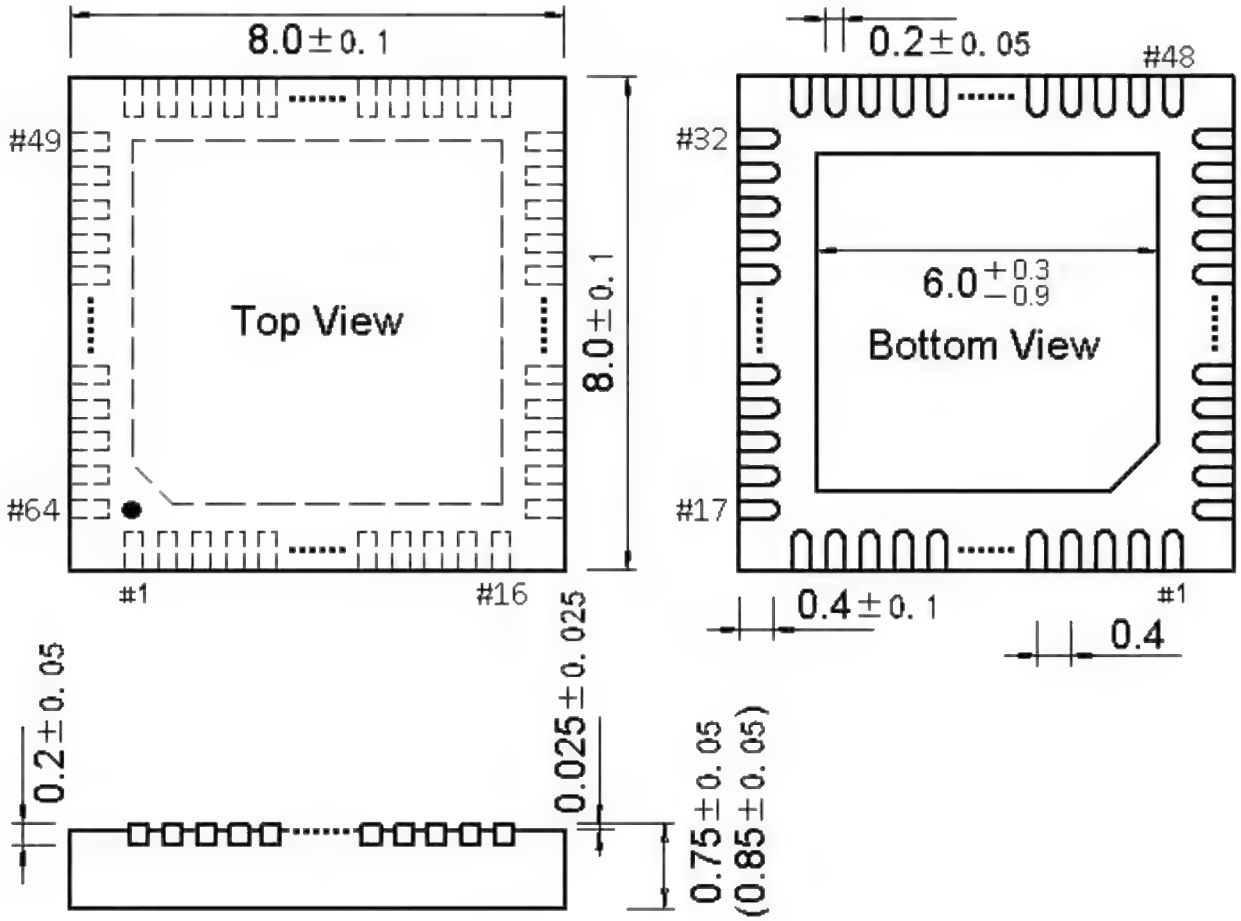

. **QFN64X9 (QFN64-9*9)**

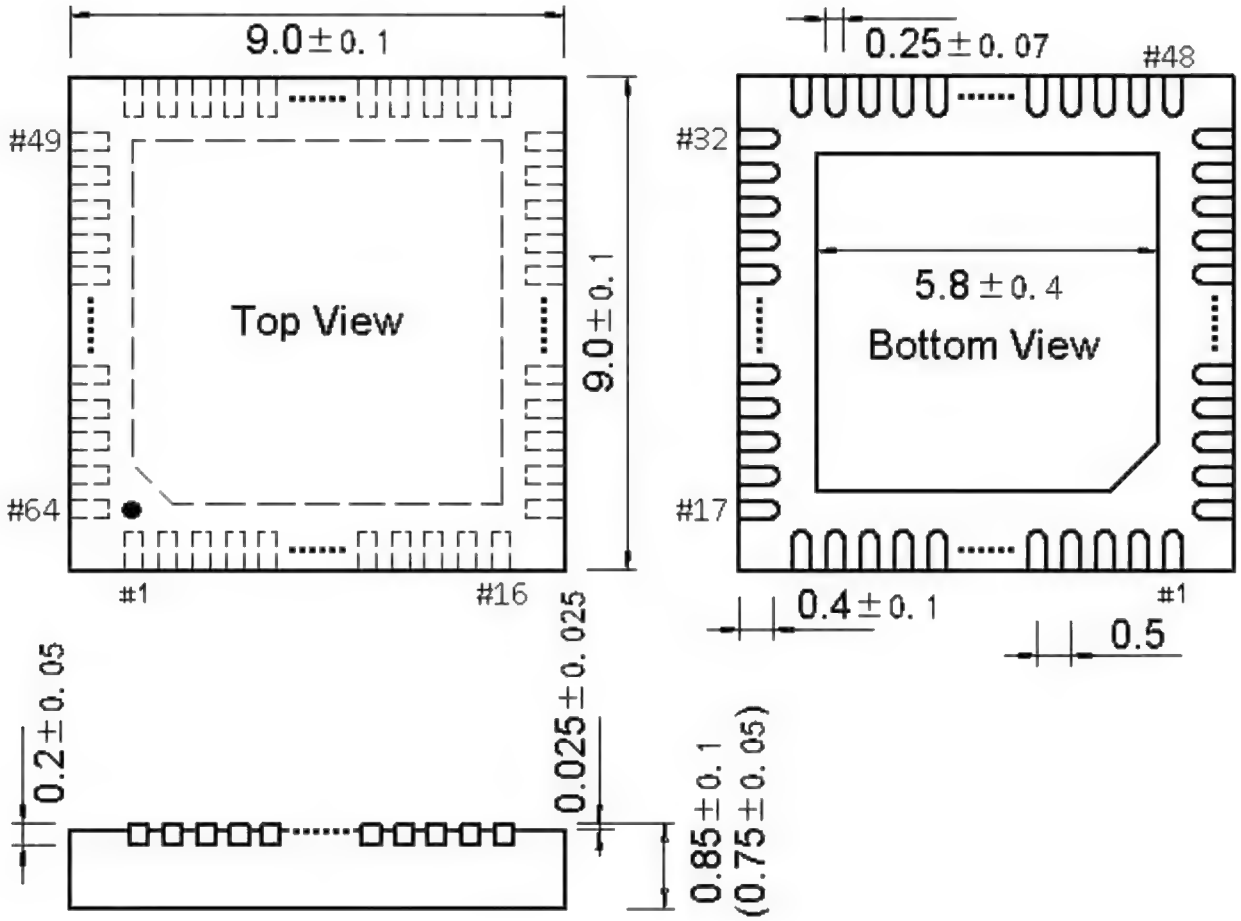

. **QFN68 (QFN68-8*8)**

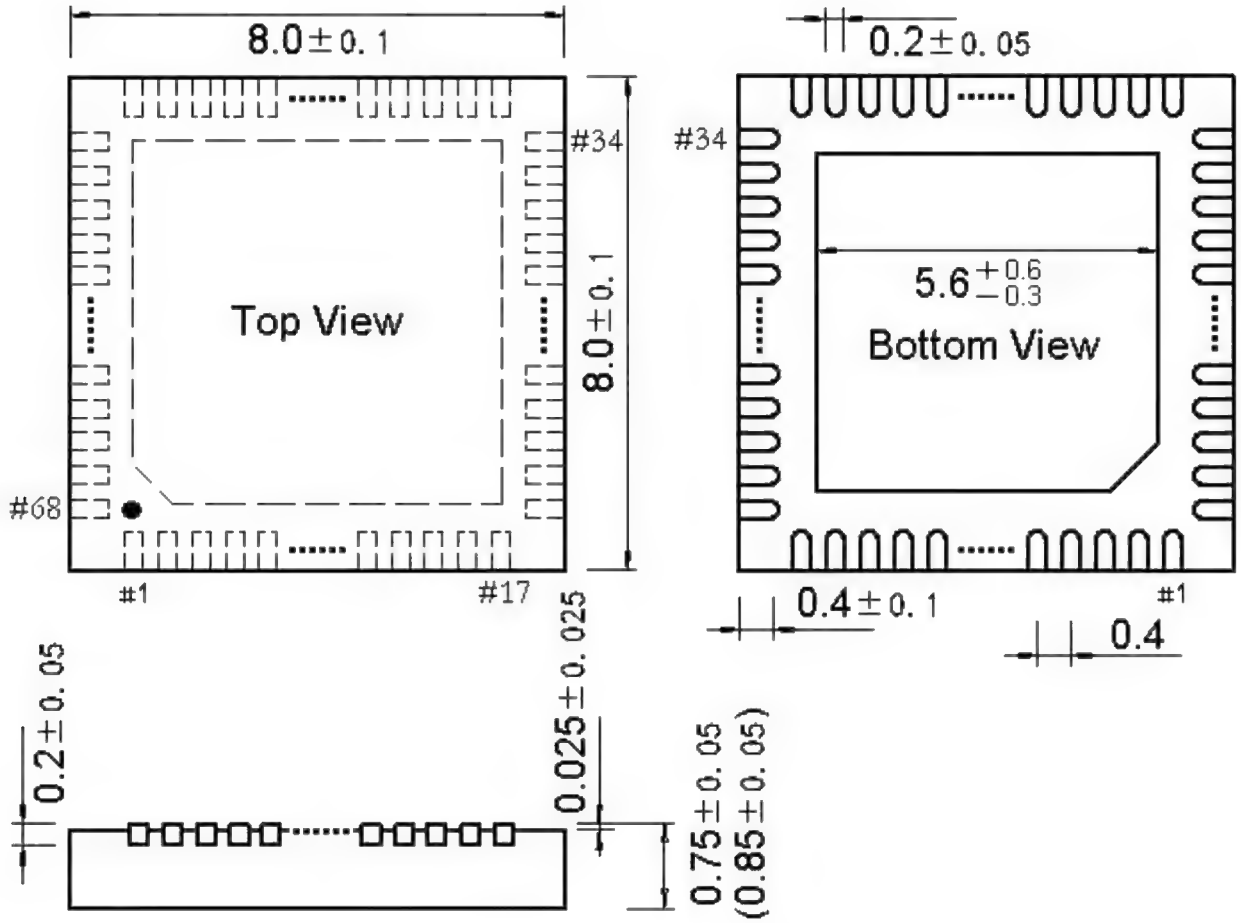

. **QFN76 (QFN76-9*9)**

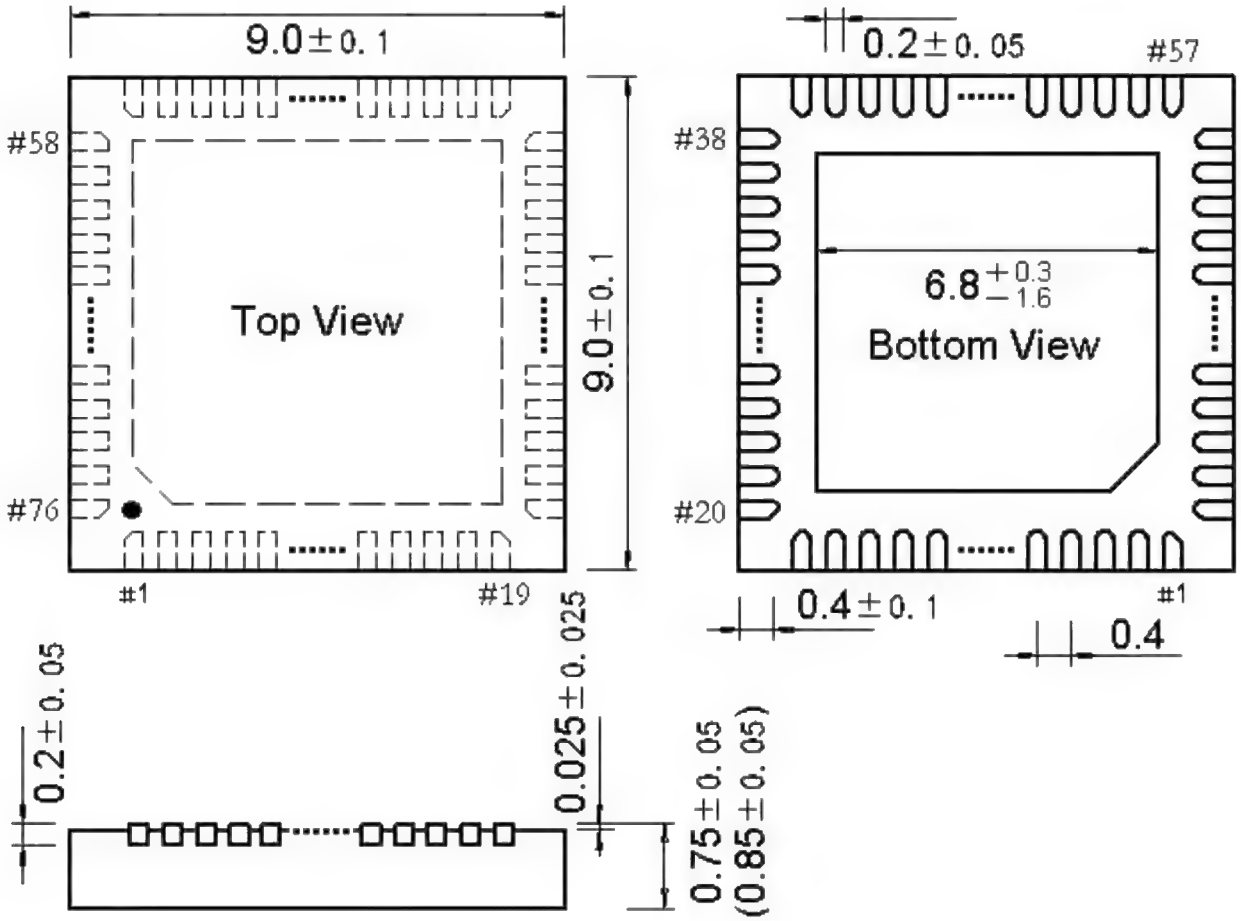

. **QFN80 (QFN80-9*9)**

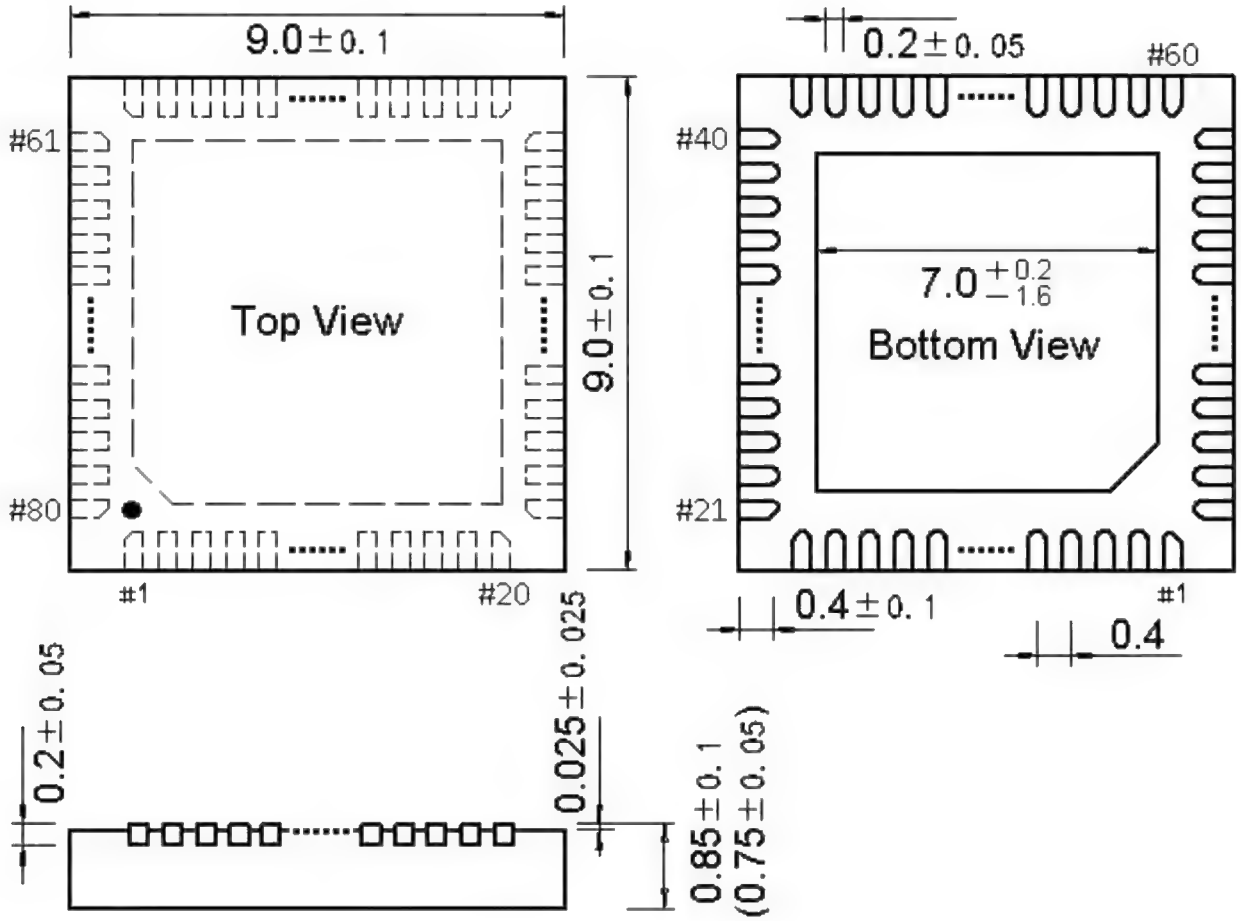

QFN88 (QFN88-10*10)

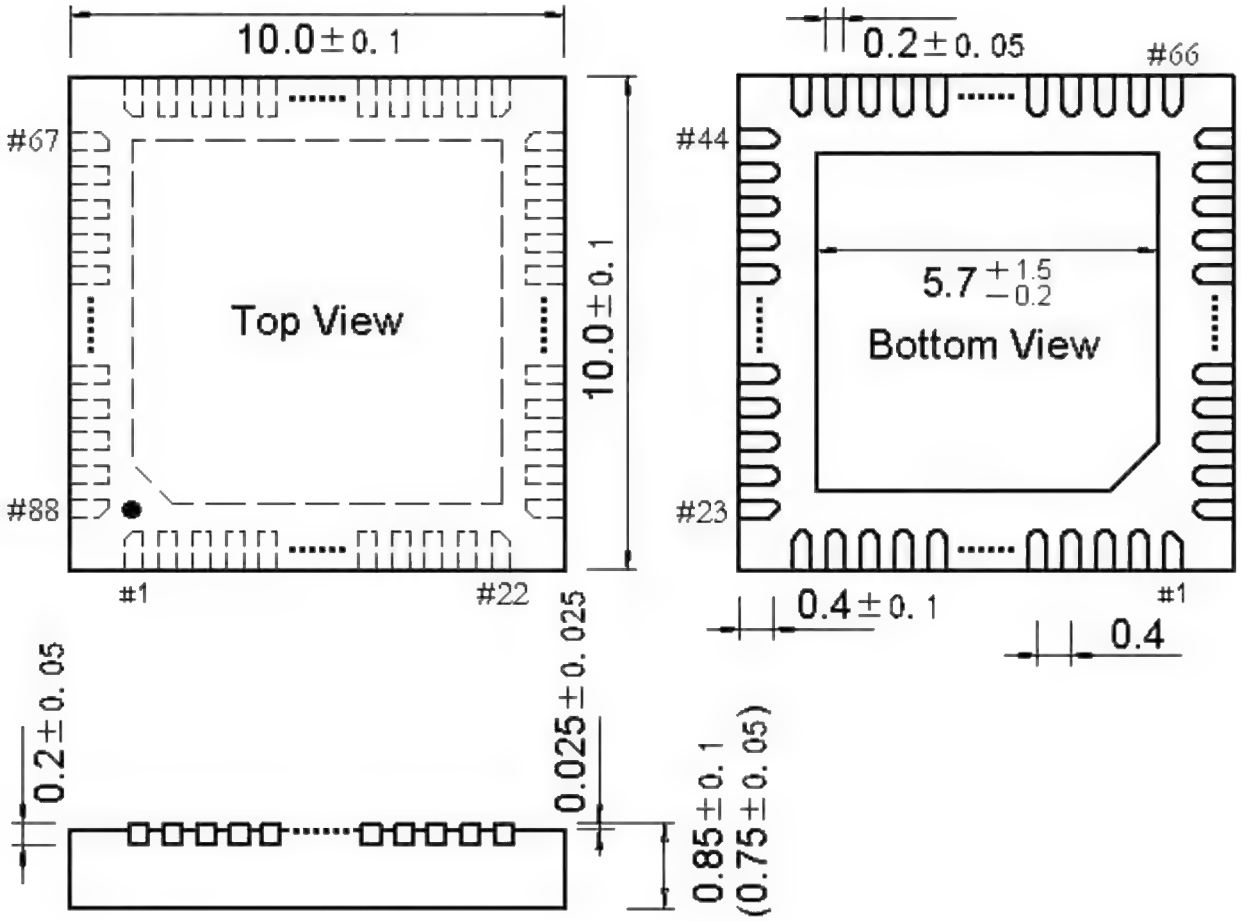

. **QFN128 (QFN128-12.3*12.3)**

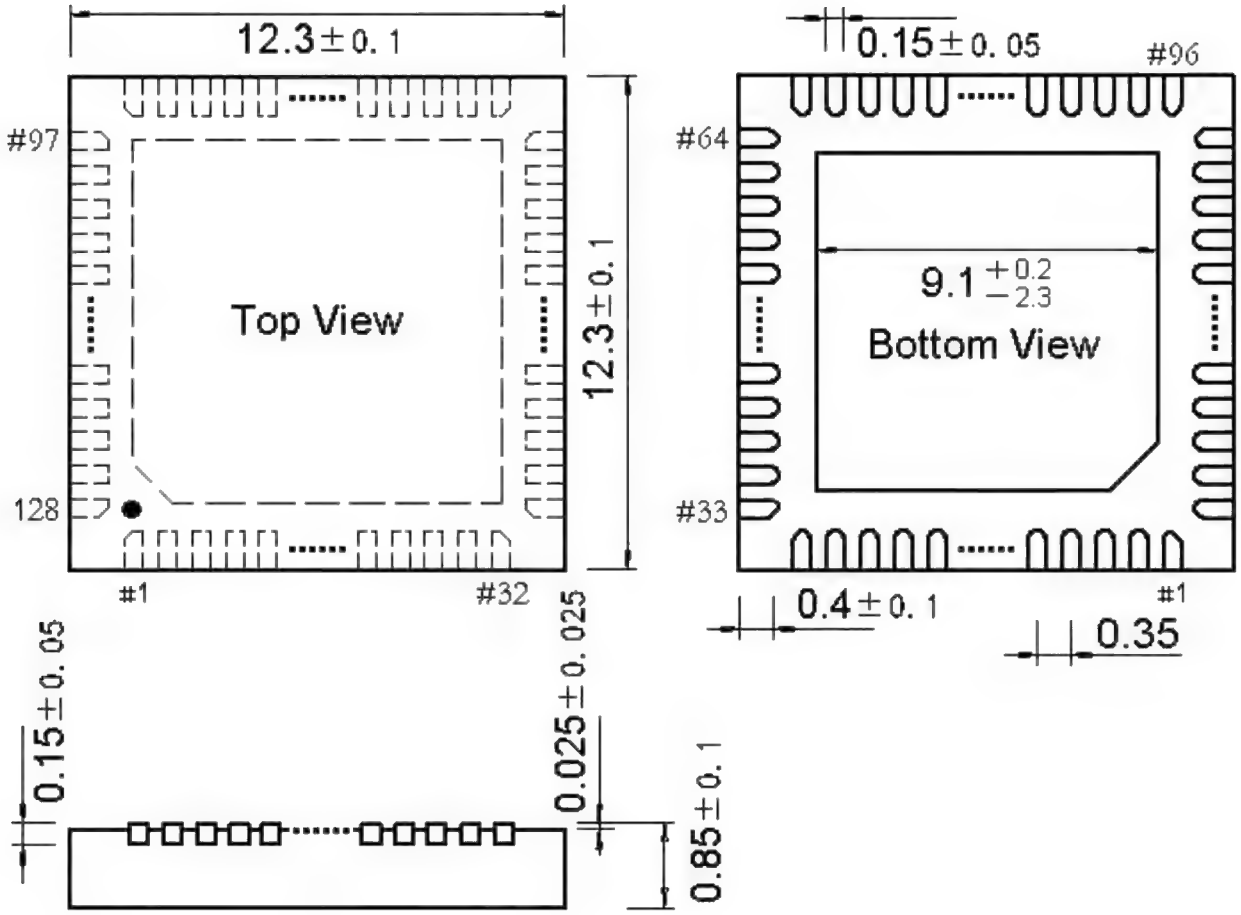

DFN Type

. **DFN6X12 (DFN6-1.2*1.2*0.45-0.4)**

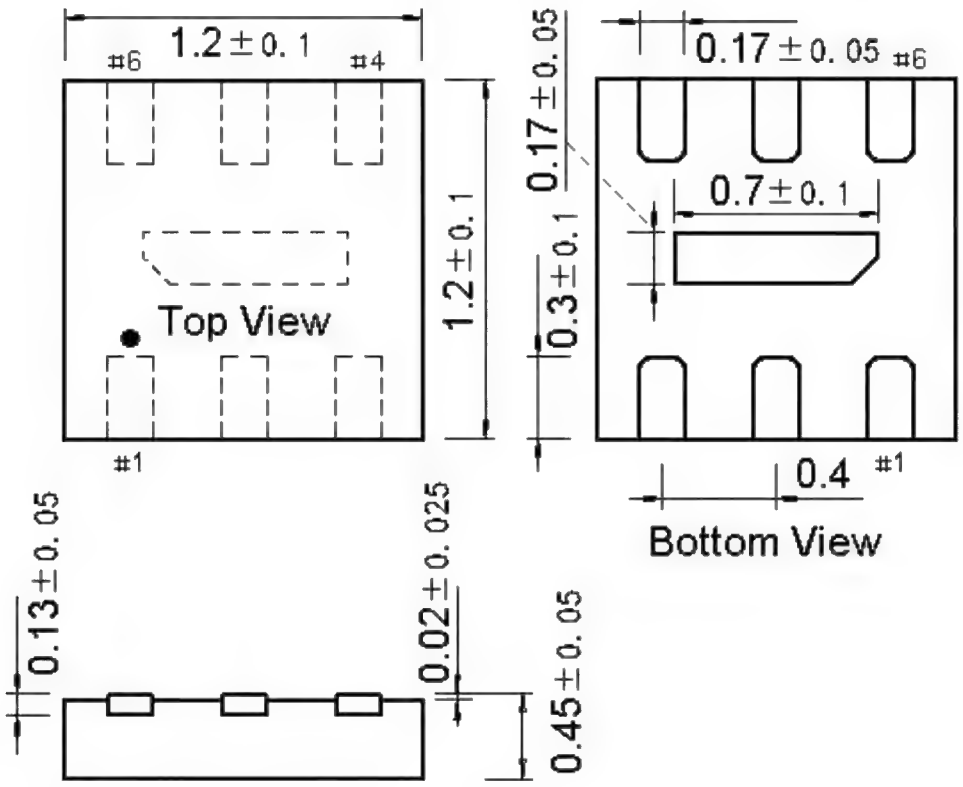

. **DFN6 (DFN6-2*2)**

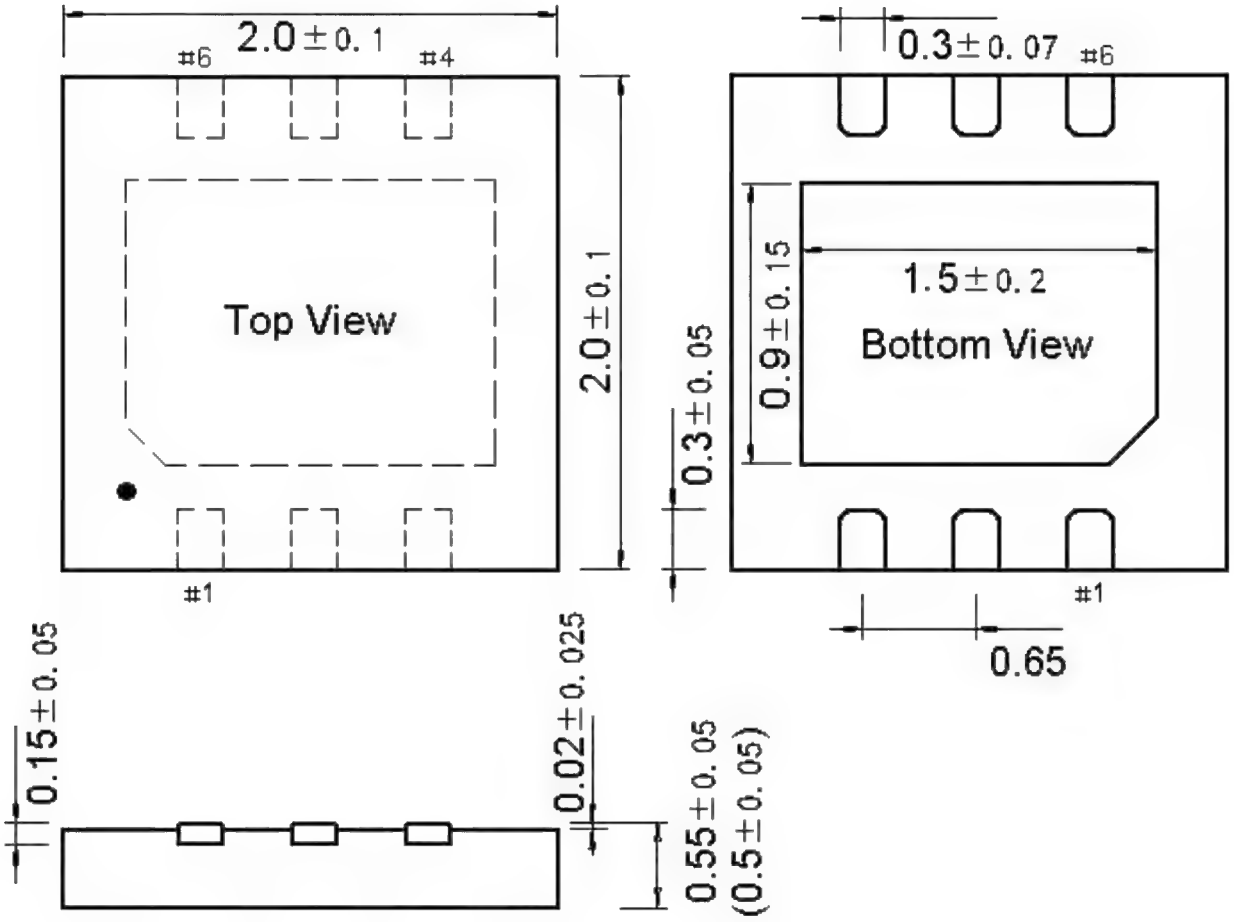
2.0±0.1
#6
#4
Top View
2.0±0.1
#1
0.3±0.07
#6
1.5±0.2
Bottom View
0.9±0.15
0.3±0.05
#1
0.65
0.15±0.05
0.02±0.025
0.55±0.05
(0.5±0.05)

. **DFN8 (DFN8-2*2)**

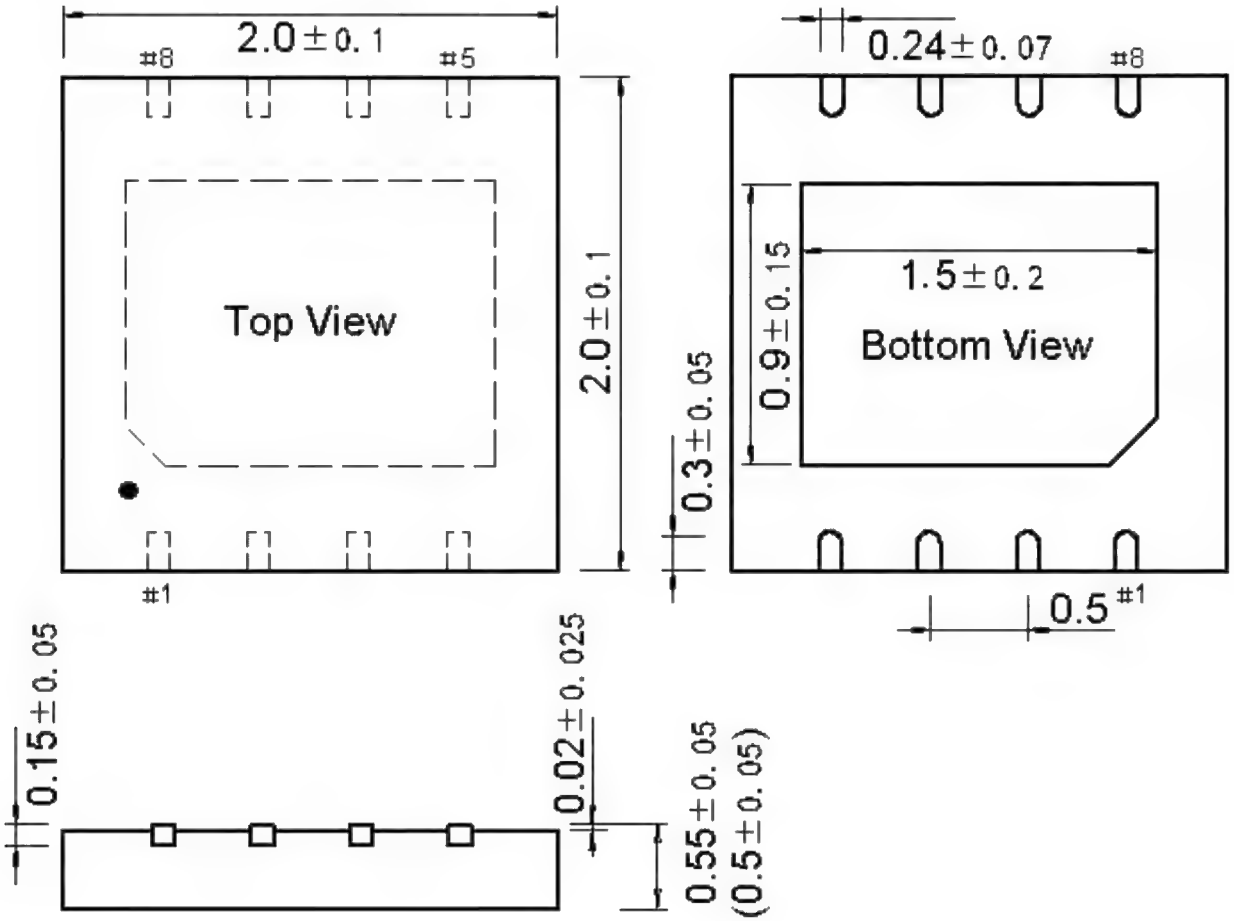
2.0±0.1
#8
#5
Top View
2.0±0.1
#1
0.24±0.07
#8
1.5±0.2
Bottom View
0.9±0.15
0.3±0.05
0.5
#1
0.15±0.05
0.02±0.025
0.55±0.05
(0.5±0.05)

. **DFN10 (DFN10-2*2)**

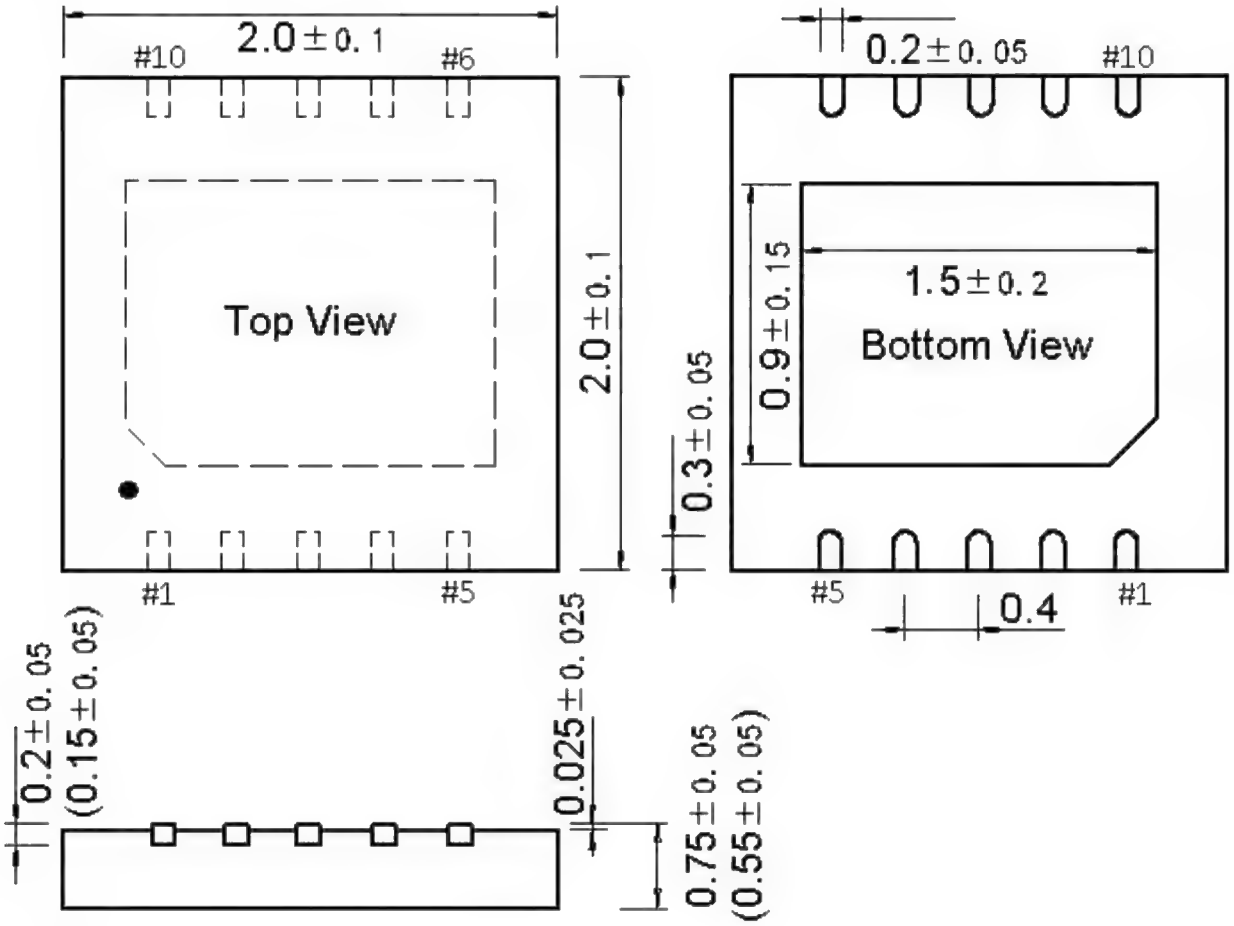

. **DFN10X3 (DFN10-3*3)**

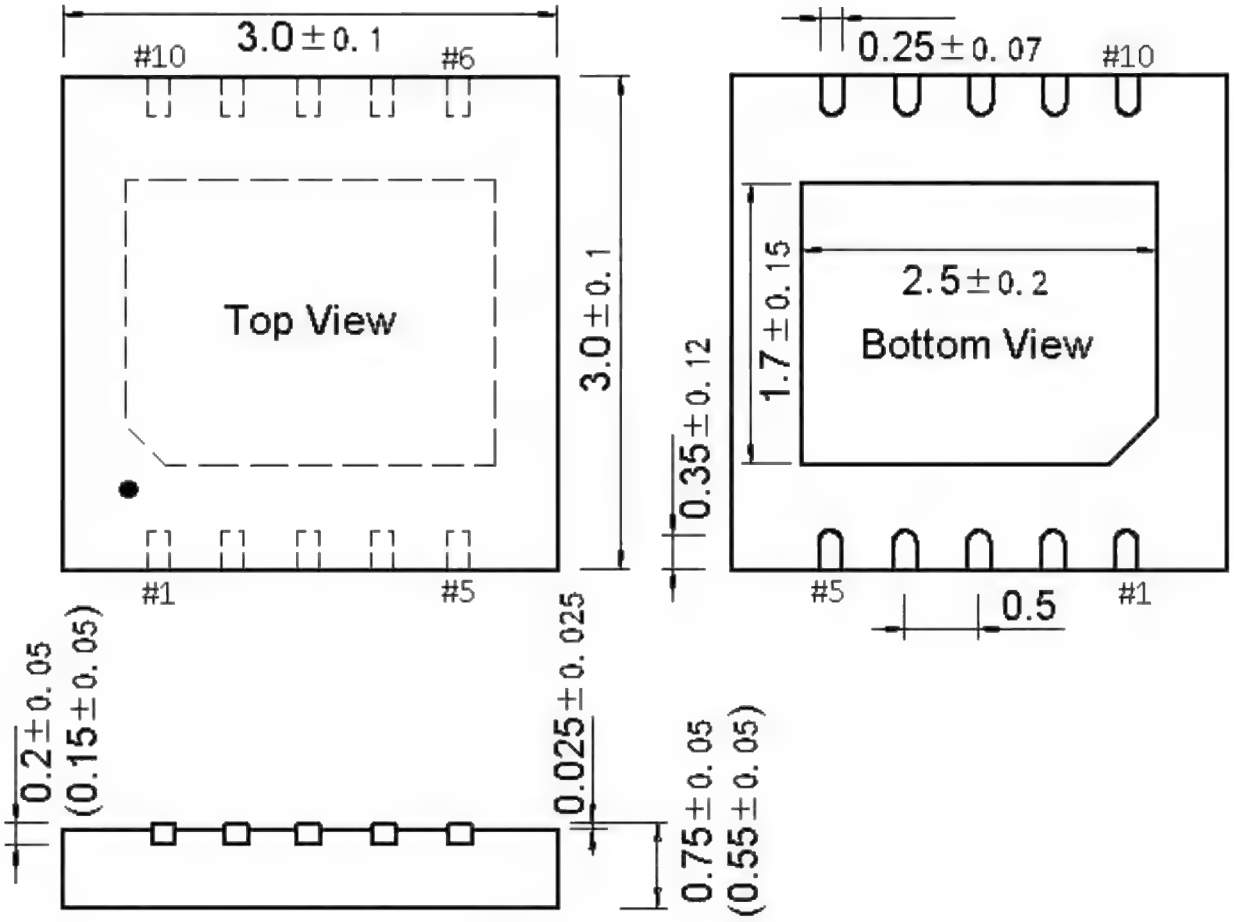

SOT Type

. **SOT23-3**

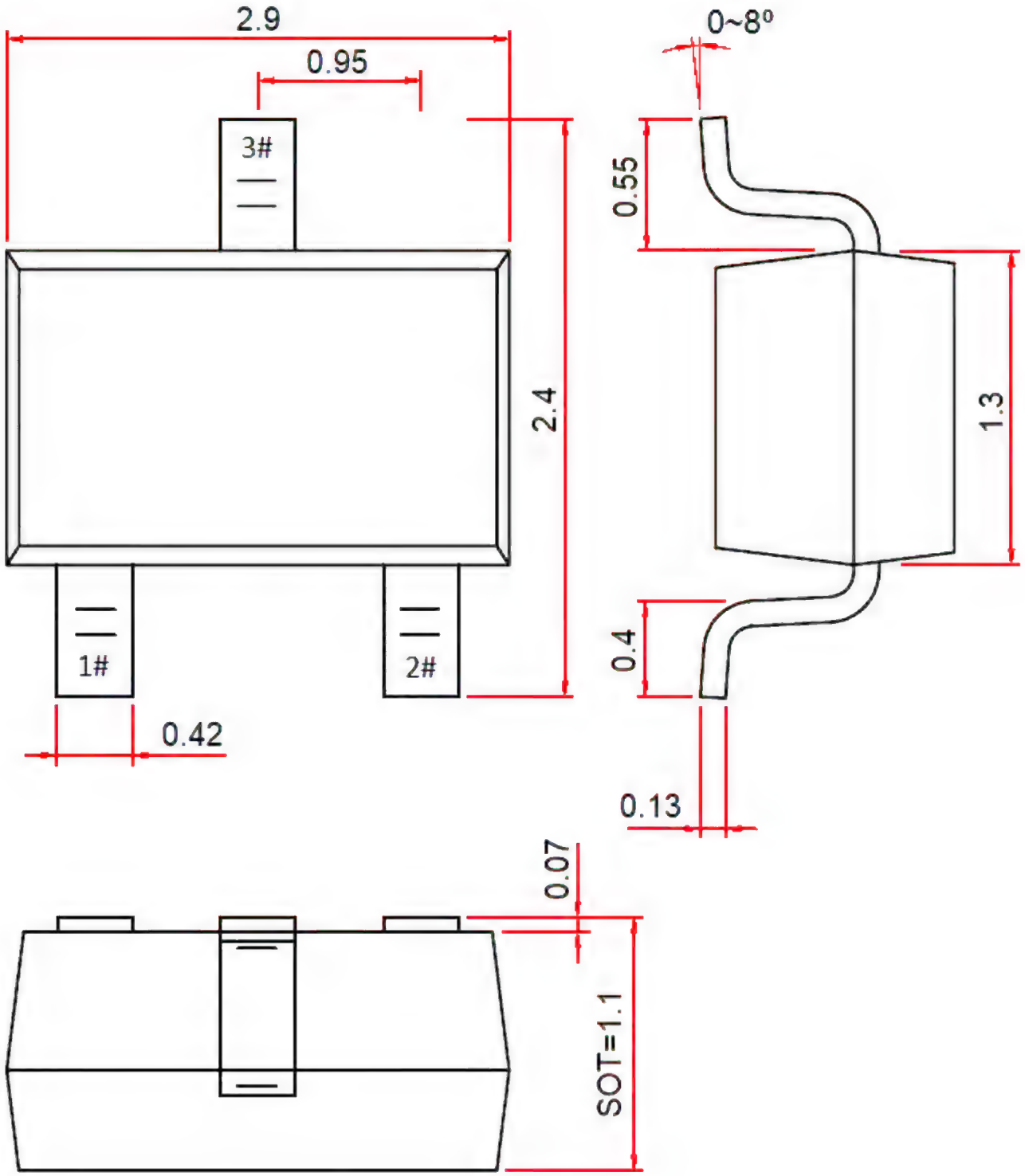

. **SOT23-5, TSOT23-5L**

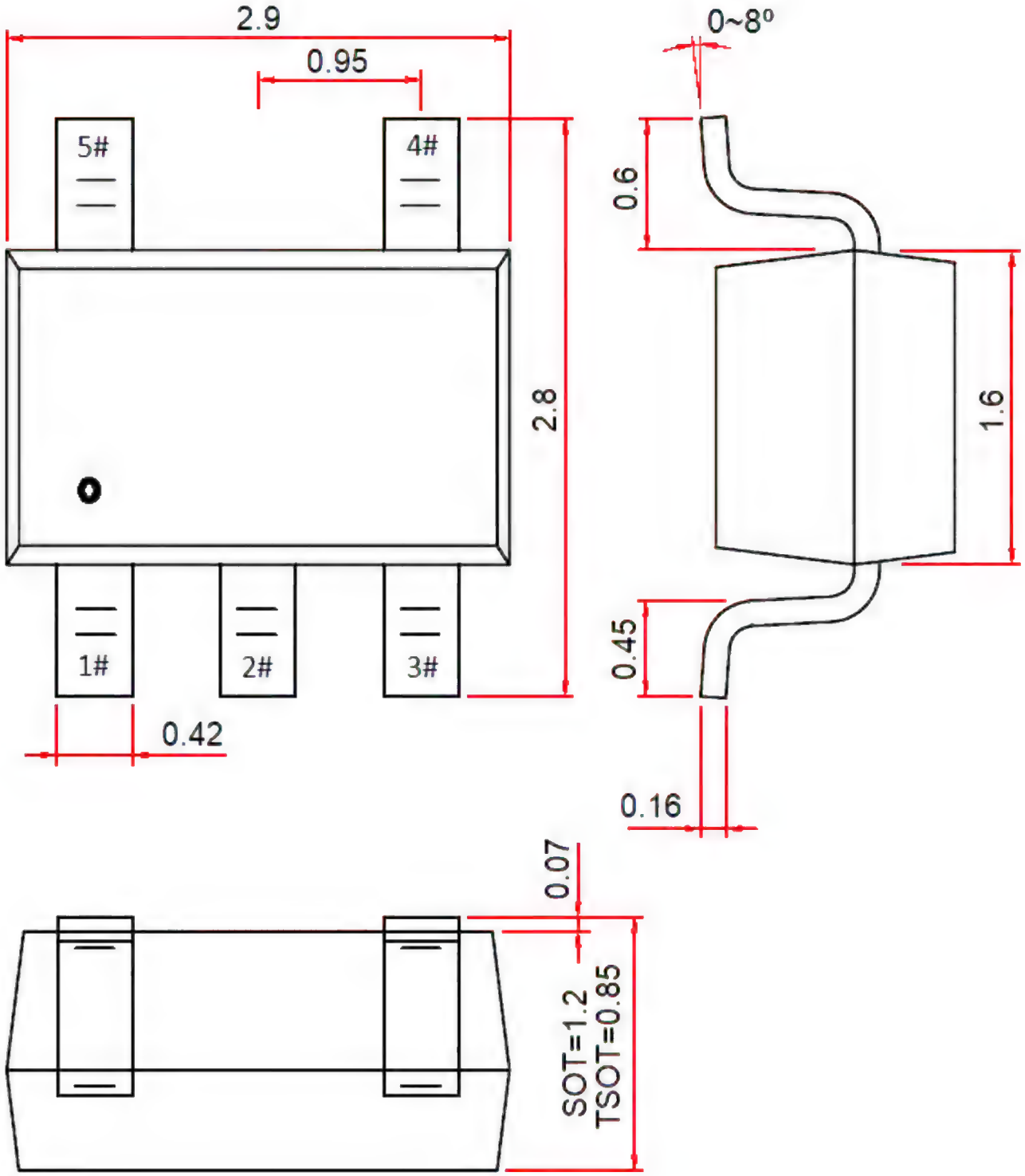

. **SOT23-6, TSOT23-6L**

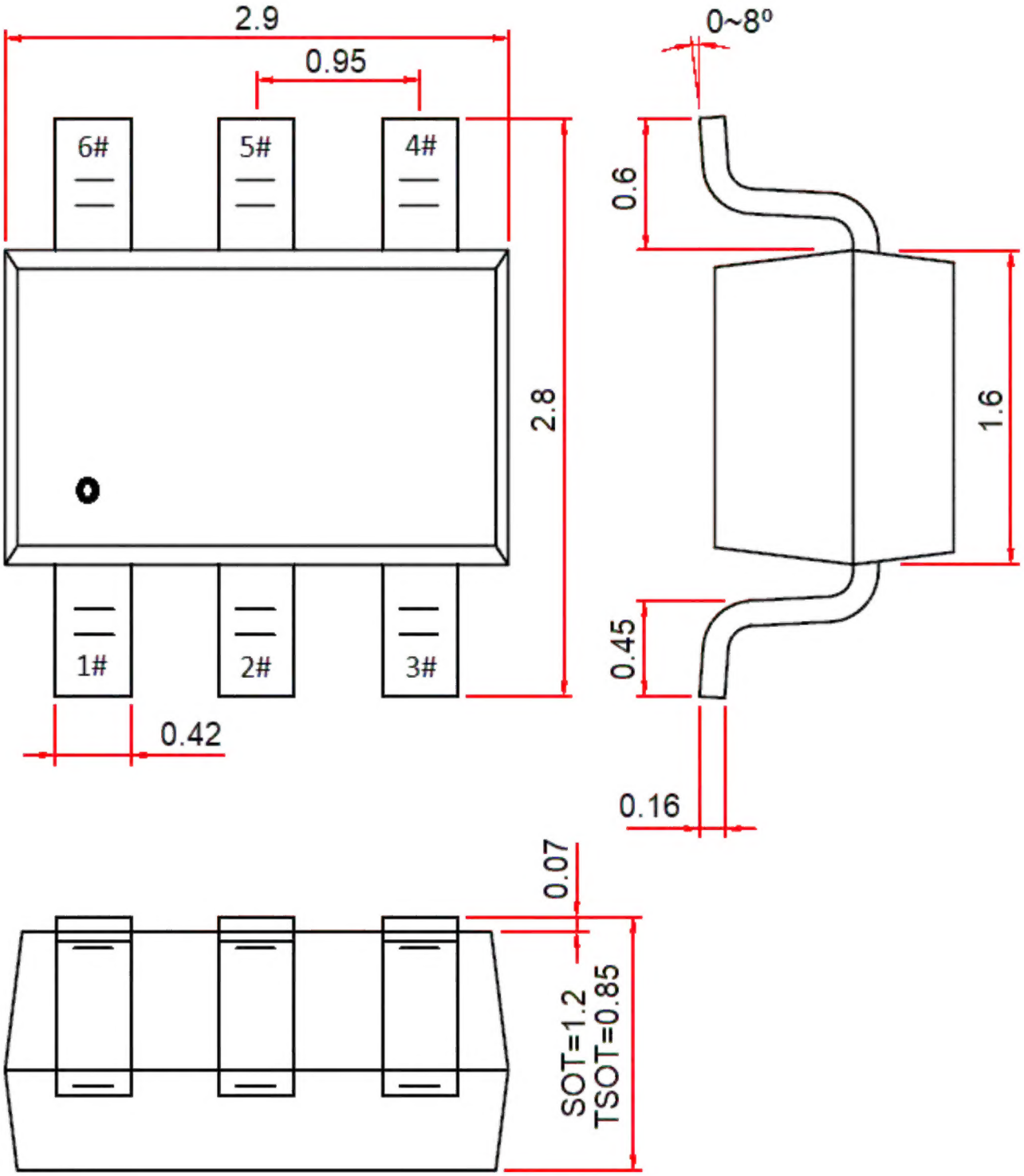

. **SOT23-8, TSOT23-8L**

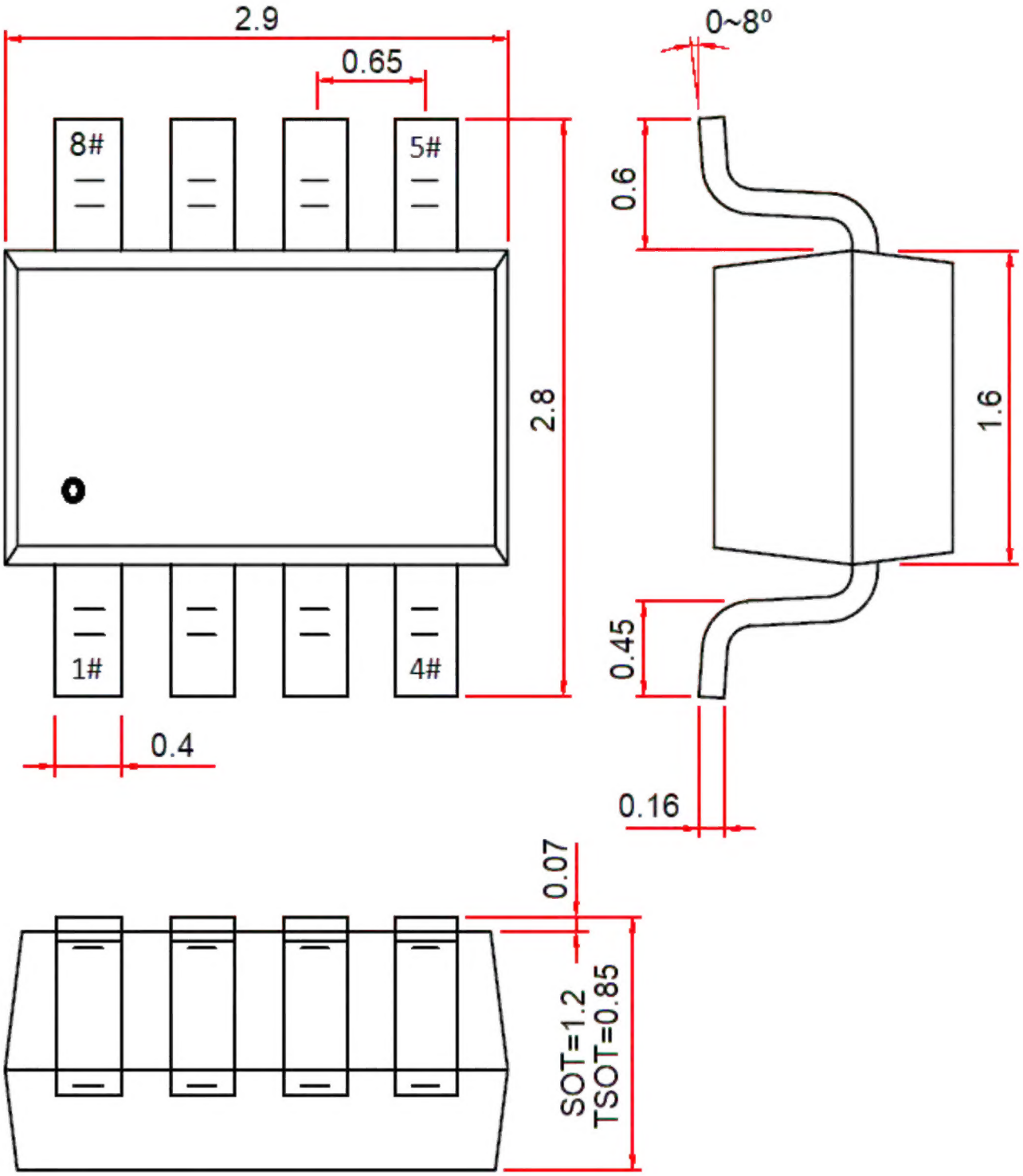

. **SOT363 (SC70-6L)**

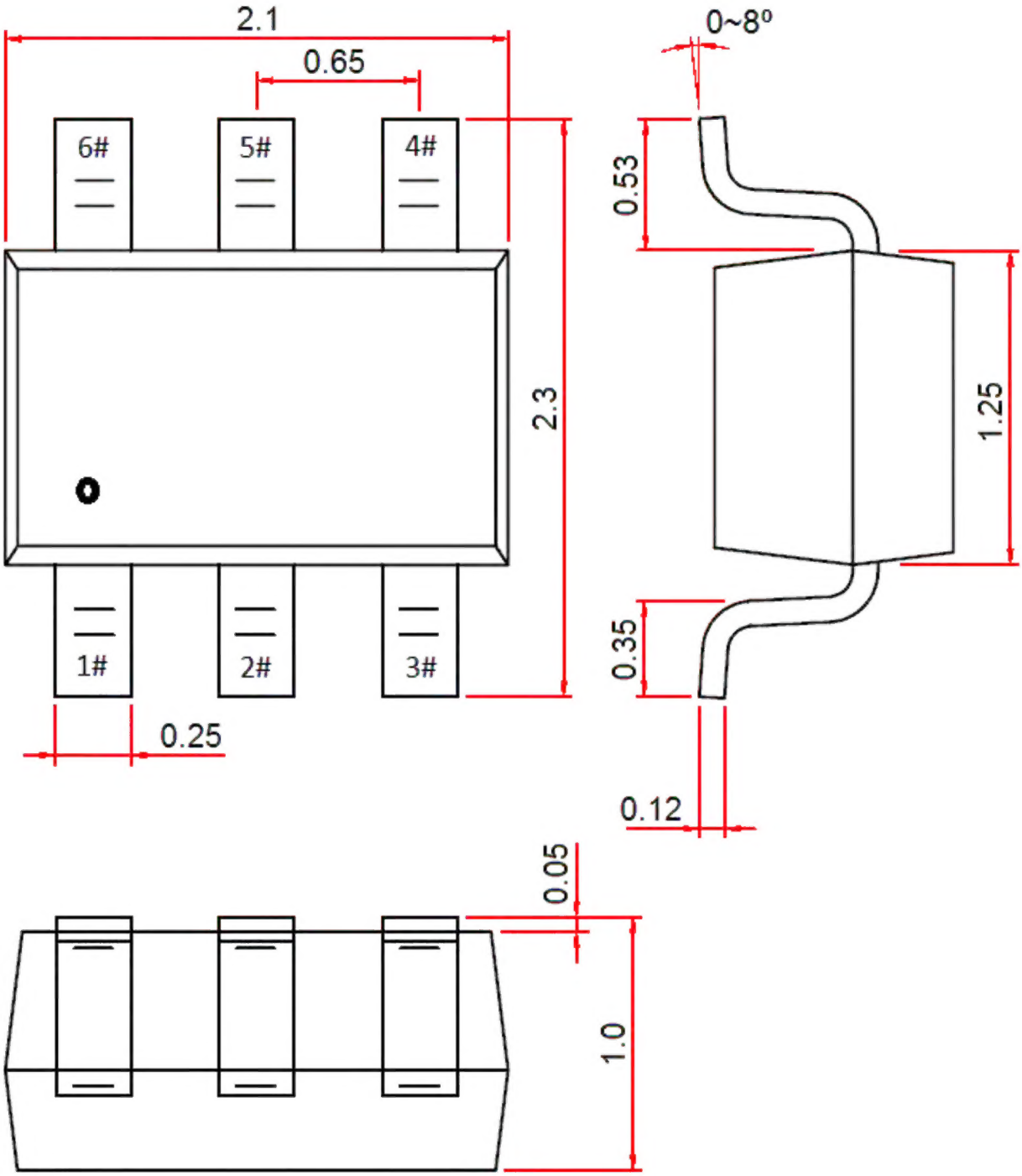
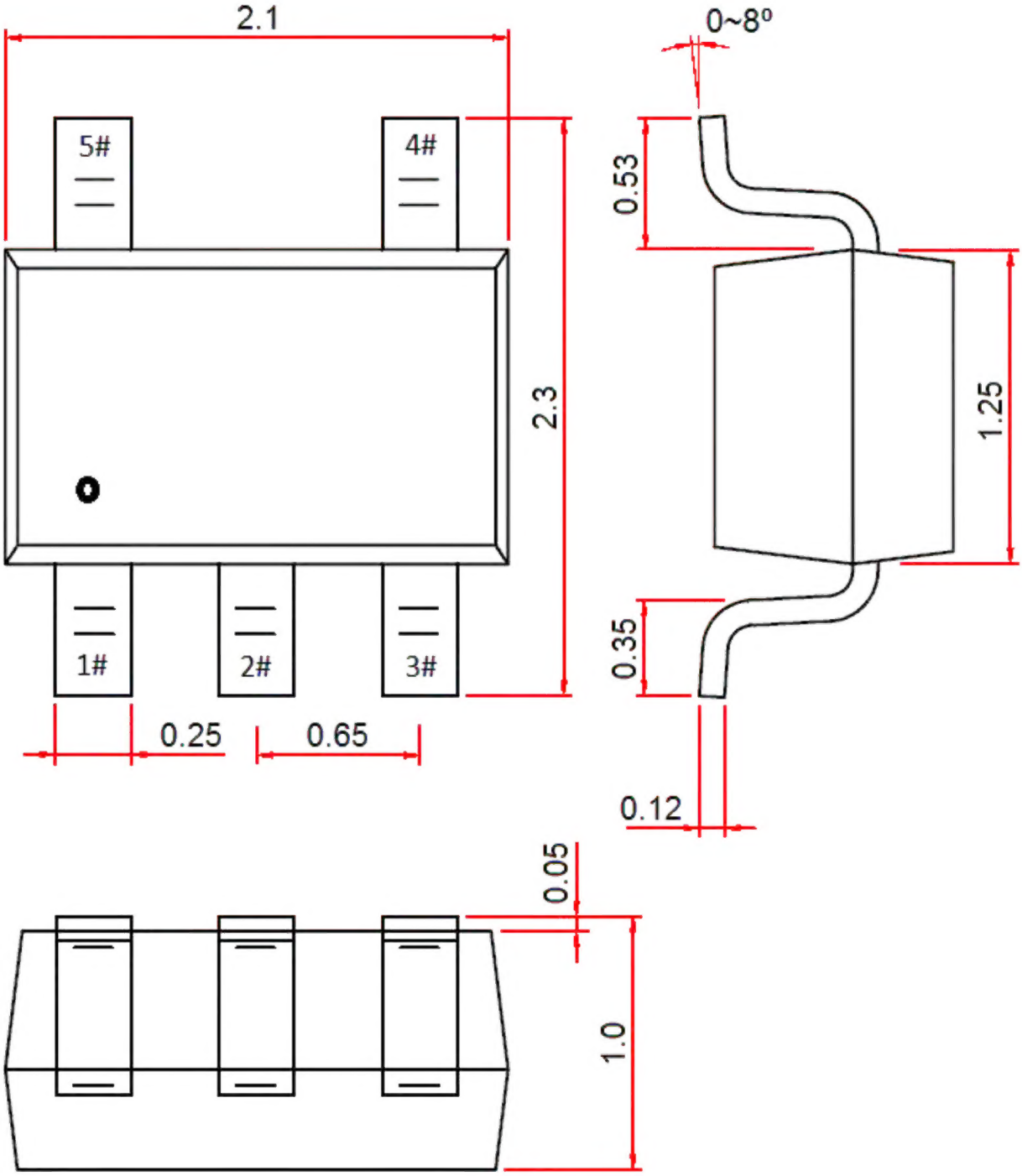
. **SOT353 (SC70-5L)**